Redcord Wall Stand

REF: 120001

Instructions for use (EN)



Redcord AS
Teknologiveien 11
NO-4846 Arendal, Norway

CE

Contents

1. Intended purpose 3
1.1. Technical information 3
1.2. Configuration of the Redcord Wall Stand 3
2. Installation and proper use 3
2.1. Content of Redcord Wall Stand 4
2.2. Installation of Redcord Wall Stand 6
3. Safety, maintenance and cleaning 14
3.1. Safety Information 14
3.2. Storage and transport 14
3.3. Cleaning and disinfection – reprocessing information 14
4. Warranty Terms 14
5. Explanation of symbols and abbreviations 15

1. Intended purpose

The Redcord Wall Stand is an accessory for the Redcord Trainer (REF 110010) and a component of the Redcord Workstation Professional, Wall Stand (REF 100123-5). It provides a solution for mounting the Redcord Trainer and the Redcord Workstation Professional to enable them to be used for treatment and exercise.
Intended patient population: Orthopedic, traumatological, rheumatological, neurological and chronic pain patients, generally deconditioned rehabilitation patients, and individuals with motor deficits, in all age groups and levels of functional limitations.
Intended User: It is intended for use by healthcare professionals, exercise professionals and non-professional users. The device is not to be used by children unattended. Education related to use is recommended but not mandatory.
Environmental use: The Redcord Wall Stand is used only in an indoor environment.

1.1. Technical information

Weight: 49 kg
Total dimensions:
Height: 2450 mm
Width: 2016 mm
Depth: 2285 mm

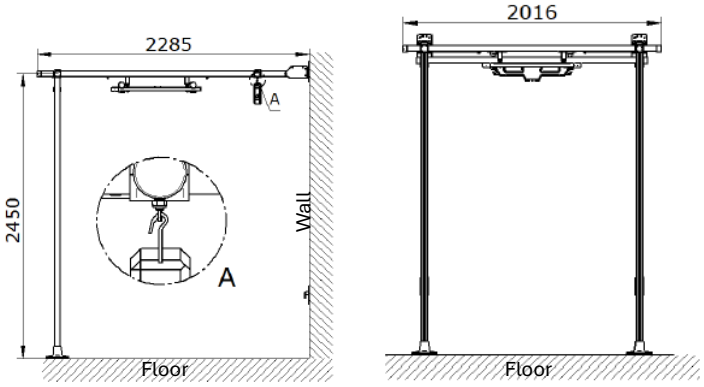

Figure 1 Front view of Wall Stand

1.2. Configuration of the Redcord Wall Stand

The Redcord Wall Stand can be mounted for **Redcord Trainer** (Figure 3) or used together with a **special version of the Redcord Sliding Suspension System III (RSSS)** made for mounting on the wall (Figures 4 and 5).
(* **Note** that the special version of the sliding suspension system (RSSS) is not included in 120001 Redcord Wall Stand. It is only available as part of the Redcord Workstation Professional, Wall Stand (REF 100123-5).)



Figure 3 Redcord Trainer installed on Wall Stand.



Figure 4 RSSS installed perpendicular crosswise to the wall.



Figure 5 RSSS installed parallel longitudinally to the wall.

2. Installation and proper use

- Before you start to install the Redcord Wall Stand, check the condition of all components. If any part shows signs of wear, cracks, deformation, corrosion, or missing hardware - **do not use.**
- The wall must be inspected and confirmed as suitable for load-bearing installation. The wall fixation plates must be installed in solid material, not just panels or wallboards. The screws included in the package are only for installation on solid concrete and solid wooden beams.
- We recommend that installation be performed by experienced professionals, with a minimum team of two people.

- Install the frame in its final location and avoid relocating the fully assembled structure. If relocation is unavoidable, first remove any accessories and fully unload the frame; move it with at least two persons and suitable lifting equipment; do not drag it; recheck stability and retighten all fasteners after relocation.
- **Ceiling Height requirement:** minimum ceiling height is 2.7 m.

2.1. Content of Redcord Wall Stand

Content of Redcord Wall Stand for Redcord Trainer REF 120001

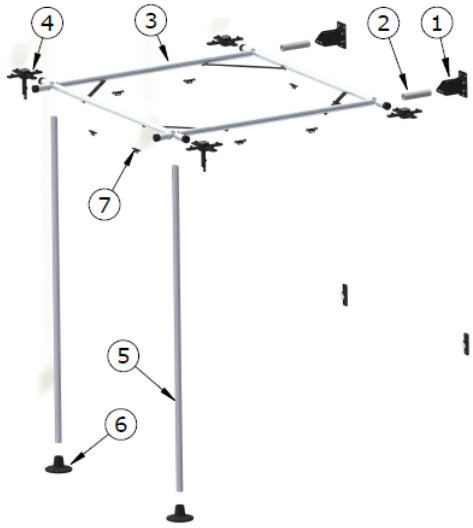

Figure 6 Components of the Redcord Wall Stand for Redcord Trainer (REF 120001)

① Wall Fixation System
② Intersection
③ Suspension Frame for Wall Stand
④ Black corner to frame
⑤ Legs for Wall Stand
⑥ Foot for Wall Stand
⑦ Fixation Plates for Trainer

*Content of Redcord Wall Stand for Sliding Suspension System (**OPTIONAL**, included as part of Redcord Workstation Professional REF100123)

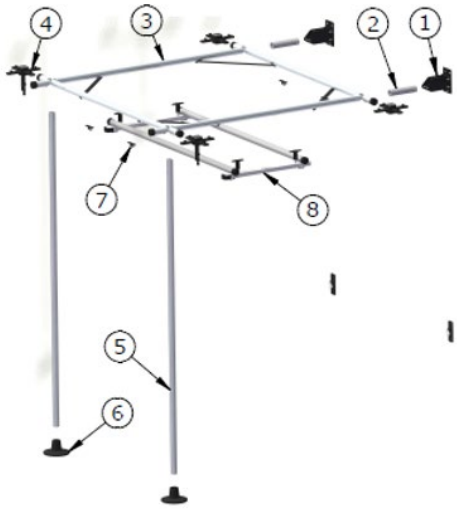

Figure 7 Components of the Redcord Wall Stand included in the Redcord Workstation Professional, Wall Stand

① Wall Fixation System
② Intersection
③ Suspension Frame for Wall Stand
④ Black corner to frame
⑤ Legs for Wall Stand
⑥ Foot for Wall Stand
⑦ Fixation Plates for Trainer
⑧ Sliding Suspension System for Wall Stand See the IFU for Redcord Workstation Professional, Wall Stand for how to mount the system.

① Wall Fixation System



2x Wall mounting plates | 2x Clamps | 2x Catch pawls | 10 sets | 14 sets | 1 set tools

Figure 8 Wall Fixation System (Parcel 1/3)

② Intersection

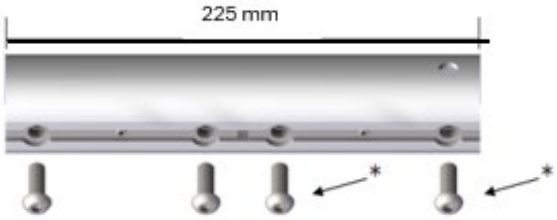

x 2 sets

*) Additional screw for mounting Redcord Wall Stand in parallel (x2, x4 – see figure 20, 21, 31,32)

Figure 9 Intersection for Wall Stand (Parcel 1/3)

③ Suspension Frame for Wall Stand

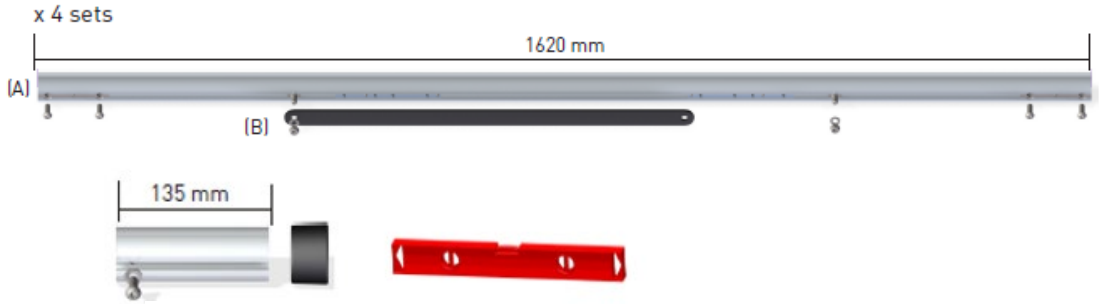

x 6 sets(C) x 1 set

Figure 10 Suspension frame for Wall Stand (Parcel 2/3)

④ Black Corner to frame



x 2 sets (D) x 2 sets (E)

Figure 11 Black corner to frame (Parcel 1/3)

⑤ Legs for Wall Stand



x 2 sets (F)

Figure 12 Legs for Wall Stand (Parcel 3/3)

⑥ Foot for Wall Stand



x 2 sets(G)



x 2 templates (H)



x 1 set distance washers (I) (2,3,5 mm)

Figure 13 Foot for Wall Stand (Parcel 1/3)

---

⑦ Fixation Plates for Trainer



x 8 sets

x 8 sets for Redcord Wall Stand for 4x Redcord Trainers (REF 120001), as figure 3 shown.

(x 4 sets for Redcord Wall Stand with Sliding Suspension System III and 2 additional Redcord Trainers (REF 100123-5).)

Figure 14 Fixation plates for Trainer (Parcel 1/3)

---

⑧ (Optional) Redcord Sliding Suspension System (RSSS) for Wall Stand



x 1 set

*It is only available as part of the Redcord Workstation Professional, Wall Stand (REF 100123-5).

Figure 15 (Optional) Sliding Suspension System Frame without Traverses.

2.2. Installation of Redcord Wall Stand

Step 1: Fix the wall mounting plate to the concrete or wooden wall

- Assemble legs and feet for Wall Stand.
- Take one of the suspension frame tubes (A) and assemble the rear crosses (E) on both sides of the suspension frame tube (A). Connect legs to the rear crosses.
- Screw the templates(H) to the wall mounting plates and mount another side of the template to the rear crosses(E).

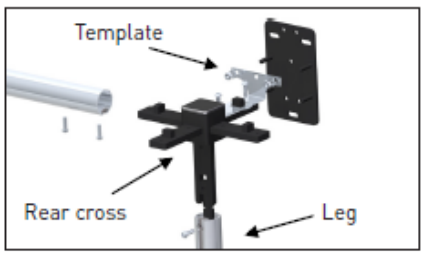

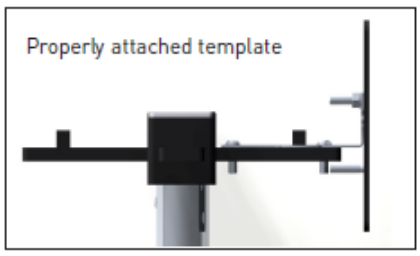

Figure 15-16, Properly attached template

- Put the assembled frame with the template(H) against the wall, and level it with the leveling tool included in the package. If the legs are not leveled, you can place 2,3 or 5mm distance washers(I) inside the feet to level the legs.

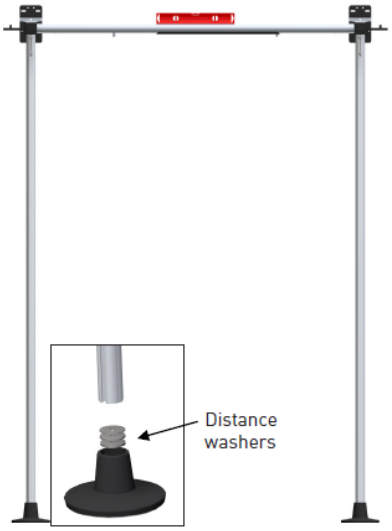

Figure 17 Step 1: Fixing the Wall Stand

- Mark the holes on the wall through the wall mounting plates.
- Drill the holes in the wall. (Pay attention to the wall type, concrete or wooden wall, see figures 18,19)
- Put the wall mounting plates on the wall and fasten them temporarily.
- Remove the templates and fix the wall mounting plates securely.

Dimension for concrete wall. Use segment anchors on the oval holes in the wall mounting plates.

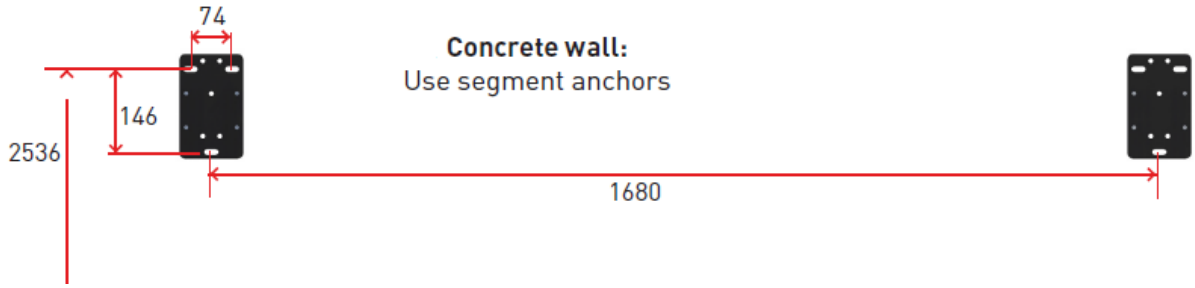

Figure 18. Anchor dimensions, concrete wall

Dimension for wooden wall. Use wood screws on the circular holes in the wall mounting plates.



Figure 19. Screw dimensions, wooden wall

Step 2: Assemble the suspension frame for Wall Stand

PAY ATTENTION TO NOT DAMAGE THE SURFACE OF THE BEAMS WHILE WORKING

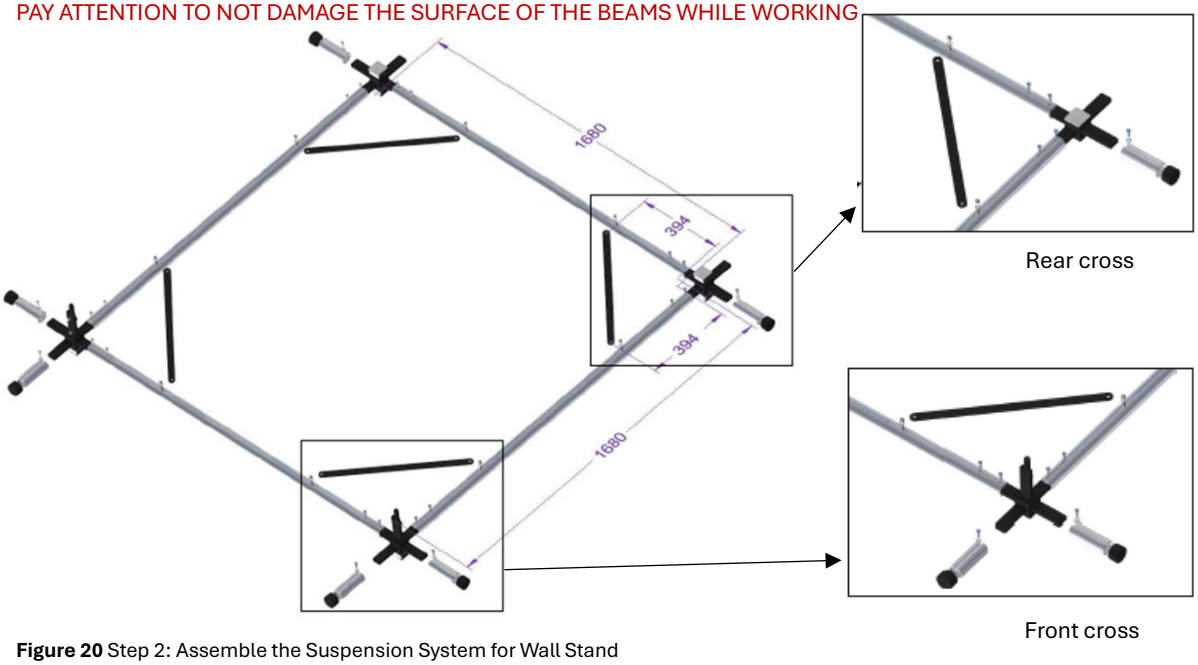

Figure 20 Step 2: Assemble the Suspension System for Wall Stand

Step 3: Attach the intersections (x2) to the Suspension Frame for Wall Stand

- Each intersection comes with 4 screws. Two go into the suspension frame, the remaining two are used when mounting multiple frames in parallel (see section 2.1 at parcel 1/3). PAY ATTENTION TO NOT DAMAGE THE SURFACE OF THE BEAMS WHILE WORKING.

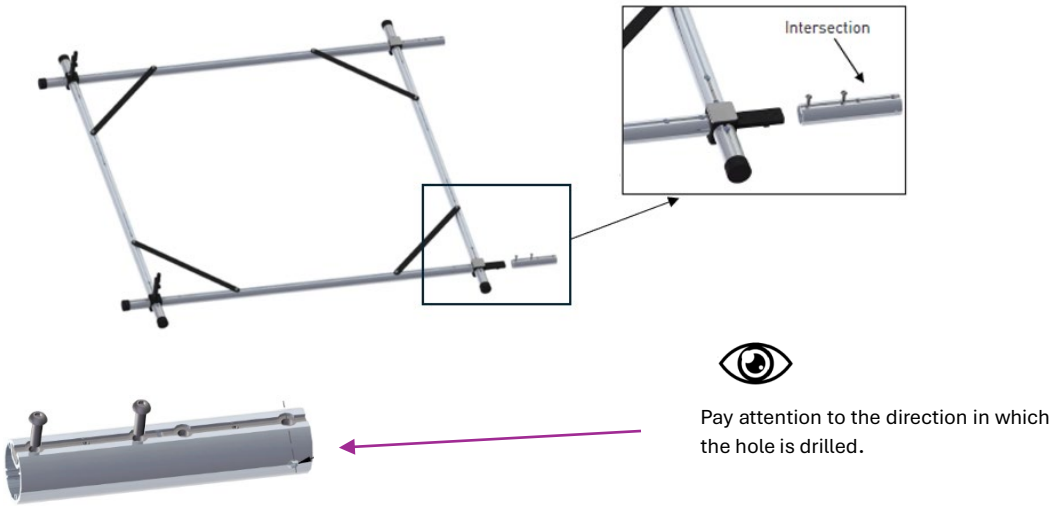

Figure 21 Step 3: Attaching the intersections (x2) to the suspension frame

Step 4: Attach the clamps to the Wall Mounting Plate

- Screw the normal nuts (x4) onto the pins on the wall mounting plate.
  (These nuts can be used for horizontal adjustments.)
- Put the round washers (x4) onto the pins.



- Put the clamps (x2) onto the pins and fasten them by using the washers (x4) and combi nuts (x4).
- Let the pins be allowed to move within the oval holes. These oval holes are used for height adjustment.



Figure 22 Step 4: Pre-assembling the wall mounting plate and attaching clamps.

Step 5: Mount the suspension frame for wall stand to the wall fixation system

- Fix the screws so as to allow the mounted frame to turn
  DO NOT TIGHTEN THE SCREWS AT THE CLAMPS PERMANENTLY YET! THE WHOLE CONSTRUCTION MUST BE LEVELED PROPERLY FIRST.



Figure 23 Step 5: Mounting the suspension frame to the wall stand.

Step 6: Mount the legs and feet to the Wall Stand

- Fasten the legs to the frame, temporarily only using one screw per leg.

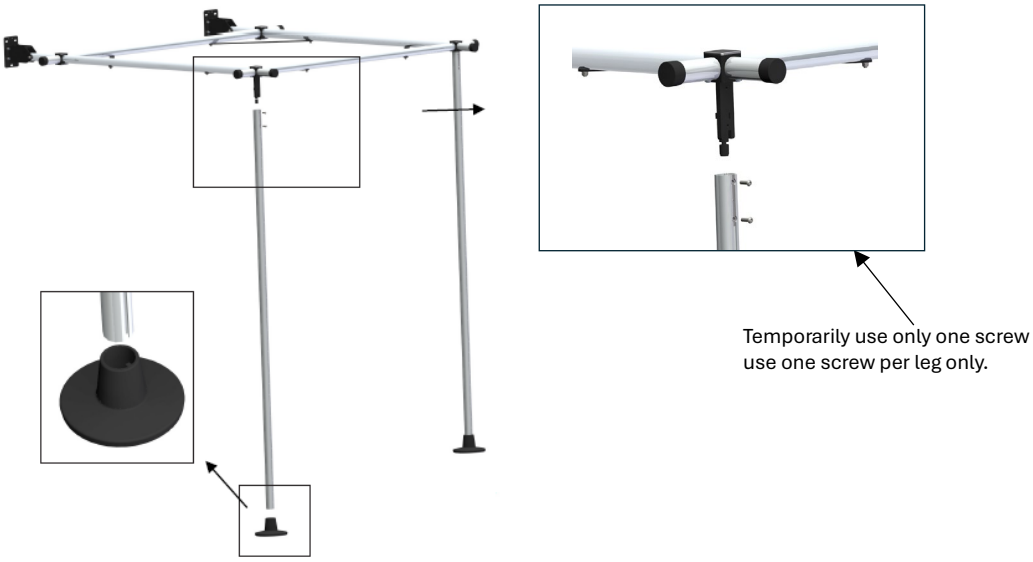

Figure 24 Step 6: Mounting the legs and feet to the suspension frame.

Step 7: Level and fix the system permanently – fasten the clamps to the wall mount plate.

- Adjust the legs to level the construction - use distance washers if necessary.
- Set the clamps in the correct position and fasten all the screws securely.

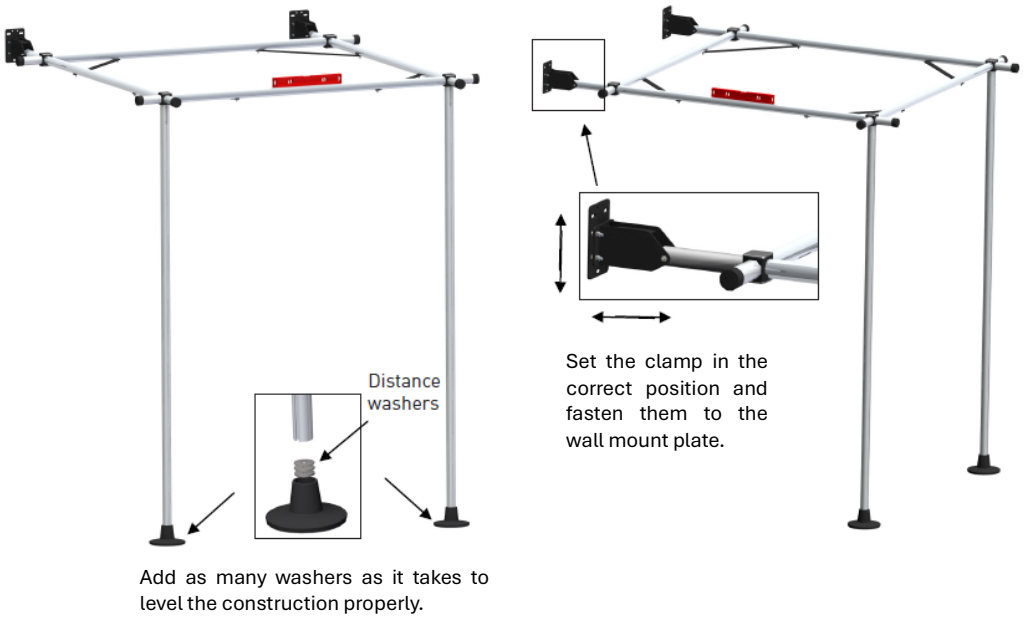

Figure 25 Step 7: Levelling the construction

Step 8: Install the catch pawls (used to secure the Wall Stand to the wall)

- Remove the legs and lower the framework so that it hangs against the wall.



Figure 26 Step 8: Installing the catch pawls

- Place each pawl assembly against the wall, lock it, and mark where the holes should go on the wall.
- Drill the holes and fasten the pawls to the wall using screws or anchors (depending on the wall type – wooden or concrete).



Figure 27 Step 8: Fastening the catch pawls to the wall



Figure 27: Illustration of the wall stand when it is secured to the wall

Step 9: Install the Fixation Plates for Trainer to the frame

- Distance between the center point of the fixation plate = 600 mm (see figure 29)

x 8 sets	Wall Stand for 4x Redcord Trainer
x 4 sets	Wall Stand for (optional) Redcord Sliding Suspension and for 2 additional Redcord Trainers



Figure 28 Fixation Plates for Trainer.



Figure 29 Step 9: Install the Fixation Plates for Trainer to the frame

OPTIONAL: Steps 10-11 describe mounting the sliding suspension system (with traverses) to the wall stand.
The sliding suspension system for the wall stand is only available in Redcord Workstation Professional, Wall Stand (REF 100123-5)

Step 10: (Optional) Assemble the Sliding Suspension System for Wall Stand

**For detailed instructions, please see the instructions for use for Redcord Workstation Professional, Wall Stand (REF 100123-5).*

- Fasten the crosspieces to the aluminum section using M6x14 DIN912 screws and washers (x8 total).
- Cover the holes using plugs (x8).
- Make sure you put traverses before assembling.



Figure 30 Step 10: Assembling the Redcord Sliding Suspension System (RSSS) for Wall Stand

Step 11: Mount the Sliding Suspension System to the Wall Stand

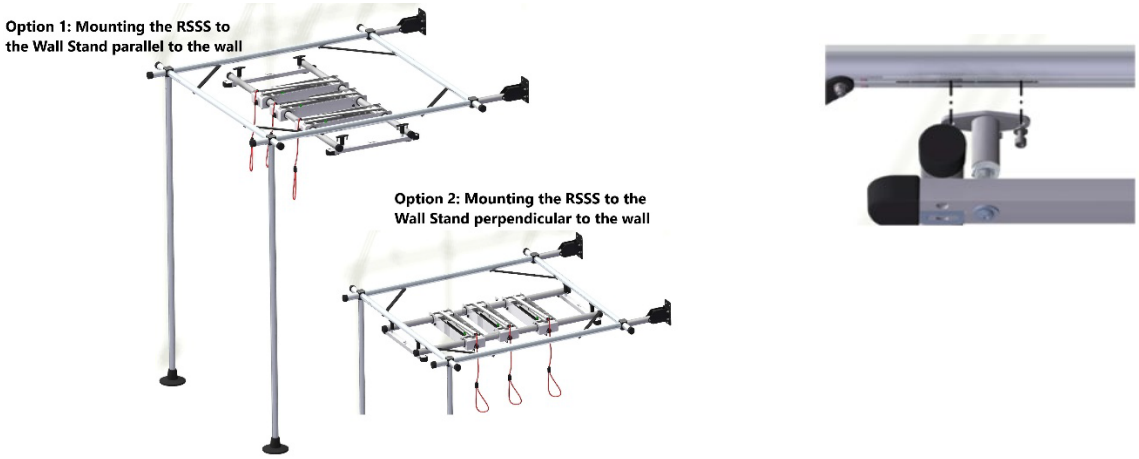

Figure 31
Option 1: Mounting the RSSS to the Wall Stand parallel to the wall
Option 2: Mounting the RSSS to the Wall Stand perpendicular to the wall

Step 12: (OPTIONAL) Mount Multiple Wall Stands Together

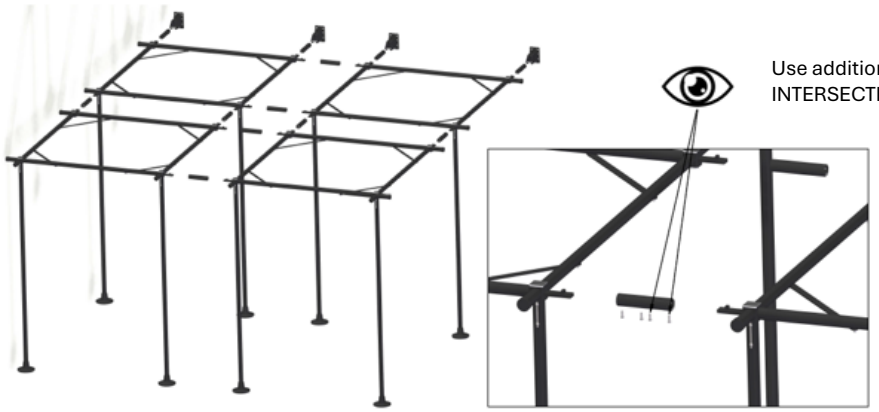

Figure 32 Mounting multiple RWSF (optional)

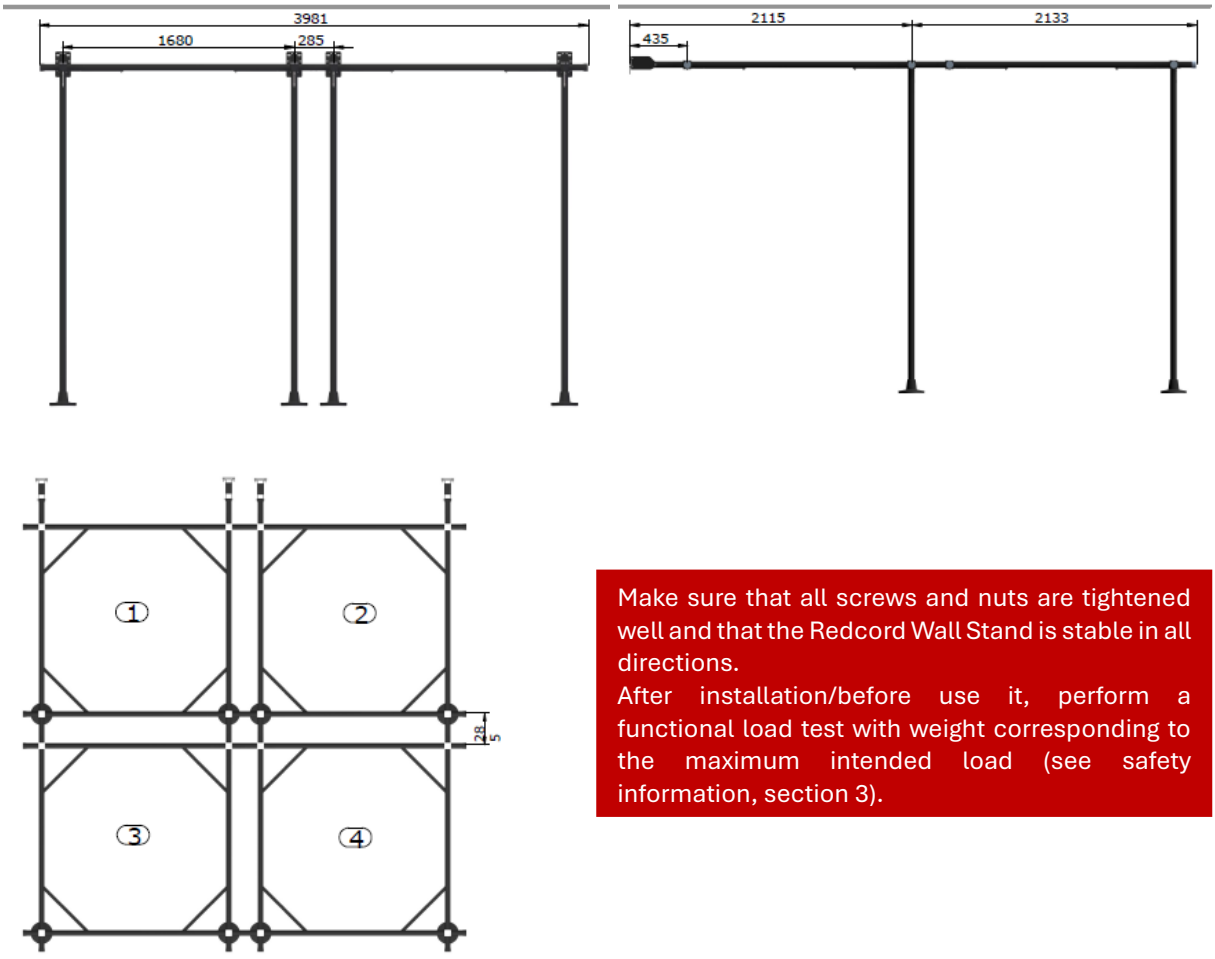

Make sure that all screws and nuts are tightened well and that the Redcord Wall Stand is stable in all directions.
After installation/before use it, perform a functional load test with weight corresponding to the maximum intended load (see safety information, section 3).

Figure 33 Top and front view of multiple Redcord Wall Stand mounted together (optional).

3. Safety, maintenance and cleaning

3.1. Safety Information

- The wall structure must be load-bearing and suitable for installation in solid concrete or wooden beams — not into wall panels or lightweight materials (e.g., gypsum, SIPOREX, YTONG, LECA).
- Perform regular safety inspection - check the condition of all components. If any part shows signs of wear, cracks, deformation, corrosion, or missing hardware, **do not use.**
- Ensure that all screws, bolts, and wall anchors are tightened and that the construction is stable before loading.
- Stop using immediately if instability or damage is observed.
- Do not climb on the stand or use the stand components for purposes other than their intended purpose.
- Do not use incompatible accessories.
- Do not modify any Redcord components or accessories.
- Respect the maximum load limit:

Redcord Trainer (one unit)	Sliding Suspension System (optional)	Wall Stand
200 kg (100kg per rope)	200 kg	600 kg (150 kg per beam)

- Perform the safety test on the Redcord Trainer or Sliding Suspension System: lower the straps to about 10 cm above the floor. Place one foot in one strap and press in a bouncing motion up and down using your full body weight.
- Redcord AS is not responsible for damage resulting from incorrect installation or use of non-original components.

Any **serious incident** that has occurred in relation to the device should be **reported to the manufacturer** and to the competent **authority of the Member State** in which the user or patient is located, in accordance with applicable national requirements.

3.2. Storage and transport

- Store indoors in a dry, cool place away from potential sources of contamination, mechanical impacts, and strong temperature variations.
- Avoid exposure to UV radiation and direct sunlight.
- Keep away from chemical agents, especially acids, which can cause invisible degradation.
- **Transport** in the original packaging. Protect metal components to avoid scratches, dents, or deformation.
- **Disposal:** The device does not contain hazardous substances. Components made of plastic, metal, and textile can be disposed of or recycled in accordance with local regulations.

⚠ **CAUTION**: Improper storage of Redcord devices and accessories may shorten their lifespan and affect safety.

3.3. Cleaning and disinfection – reprocessing information

Not intended to be sterilized.
Before use and between users: inspect the external surfaces for damage or wear. Clean the contact surfaces. If required by local hygiene procedures, disinfect them with a non-corrosive, hospital-grade disinfectant compatible with painted/anodized metal and plastics. Wipe off residues and let the product dry completely.
Regular cleaning helps maintain proper function.

- Clean with a soft cloth moistened with water or a mild cleaning agent (e.g., soft soap).
- Disinfectants are permitted.
- **Do not use** abrasive cloths, scrubbing powders, or solvents such as spirit or petrol.

4. Warranty Terms

Warranty	2 years. The warranty covers any faults in materials or manufacture. The warranty period runs without interruption for a period of 24 months from the delivery date of the products from Redcord AS. Exclusions from the guarantee: normal wear and tear, modifications or alterations, incorrect storage, poor maintenance, negligence, improper or incorrect usage. The warranty is valid only if there are deficiencies in the product, i.e., it is clearly wrong according to the technical specification and how the product is intended to be. Incorrect use and normal wear and tear are not eligible for claims. Redcord‘s obligations pursuant to this warranty are limited to repair or replacement.

5. Explanation of symbols and abbreviations

Symbol Glossary	
CE	Complies with the general safety and performance requirements of Regulation (EU) 2017/745 for medical devices.
UDI	Unique device identifier (UDI) The product label includes a UDI for traceability
	Manufacturer
LOT	Batch code
REF	Catalogue number (REF)
	Caution
	Keep dry
	Keep away from sunlight
	Consult Instructions for use

Contact and technical support
Redcord AS,
Teknologiveien 11, NO-4846 Arendal, Norway
redcord@redcord.com +47 37 03 00 00
Local Distributors: www.redcord.com