Redcord Workstation Professional, Floor Stand

REF: 100223-5

Instructions for Use / EN



Redcord AS
Teknologiveien 11
NO-4846 Arendal, Norway

CE MD

Contents

1. General information of Redcord Workstation Professional, Floor Stand 3
1.1. Intended Purpose 3
1.2. Contents of the Redcord Workstation Professional, Floor Stand 3
1.2.1. Contents of the Support Frame 4
1.2.2. Contents of the Traverse 4
1.2.3. Contents of the Redcord Floor Stand 5
1.3. Contraindications to use 5
1.4. Precautions 5
2. Installation and proper use 6
2.1. Information before installation 6
2.2. Technical information 6
2.3. Assemble the Redcord Floor Stand 7
2.4. Operating the traverse 12
3. Safety and maintenance 12
3.1. Warnings and Cautions 12
3.2. Storage and transport 14
3.3. Cleaning and disinfection – reprocessing information 14
4. Accessories and Replacement Parts 15
5. Various configurations/variants available on the market 15
6. Warranty Terms 15
7. Explanation of symbols and abbreviations 16

1. General information of Redcord Workstation Professional, Floor Stand

1.1. Intended Purpose

The Redcord Workstation Professional is used for treatment. It creates a system of multiple movable suspension points for the suspension of more body parts simultaneously. This enables:

- Performing body-weight-bearing exercises (closed kinetic chain) with involvement reaching from selected body segments to complete kinetic chains, where the ropes provide an unstable base of support with increased freedom of movement.
- Offloading body weight to adapt to patient's load tolerance and capacity when doing body-weight-bearing exercises.
- Performing open kinetic chain exercises reaching from pendular movements with little or no resistance to movements resisted by elastic cords providing different levels of resistance.
- Performing exercises containing rotational movements using the Redcord Axis.
- Providing a helping hand offloading the health care professional by suspending one or more body parts or the entire body while performing passive or active assisted movements and techniques or enabling pain-free positioning of a limb, body part, or the entire body.

The Redcord Floor Stand is a component for the Redcord Workstation Professional, Floor Stand (REF: 100233-5). It provides a solution for mounting the Sliding Suspension System III (SSS III).

Intended Medical Indication: Testing, treatment, and prevention of musculoskeletal disorders and in the rehabilitation of neurological disorders, rheumatological disorders, chronic pain, and after trauma. It is also indicated in the treatment of generally deconditioned rehabilitation patients and individuals with motor deficits.

Intended patient population: Orthopedic, traumatological, rheumatological, neurological, and chronic pain patients, generally deconditioned rehabilitation patients, and individuals with motor deficits, in all age groups and levels of functional limitations.

Intended User: It is intended for use by Healthcare and Exercise professionals. Education related to use is recommended but not mandatory. This device is intended for multiple-patient, multiple-use. Follow the cleaning and maintenance instructions to ensure safe reuse.

Environment of use: Redcord Workstation Professional should be used only in an indoor environment.

1.2. Contents of the Redcord Workstation Professional, Floor Stand

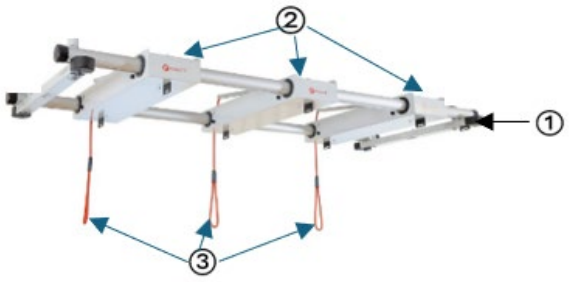

Figure 1. Redcord Sliding Suspension System III

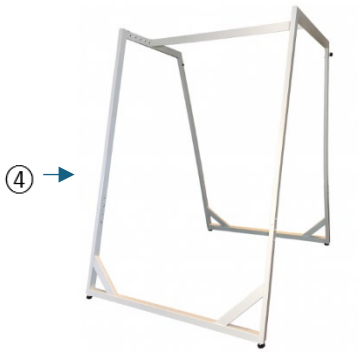

Figure 2. Redcord Floor Stand

① Support frame of Sliding Suspension System III (**without** mounting legs attached).

② Traverses, 3 pcs

③ Brake rope (attached in each Traverses)

④ Floor Stand

Legs required to mount the Sliding Suspension System III are not included with this product REF 100223-5 They must be purchased separately. It is recommended to use 15cm legs with the Floor Stand for the optimal suspension height.

⑤ Redcord accessories package:

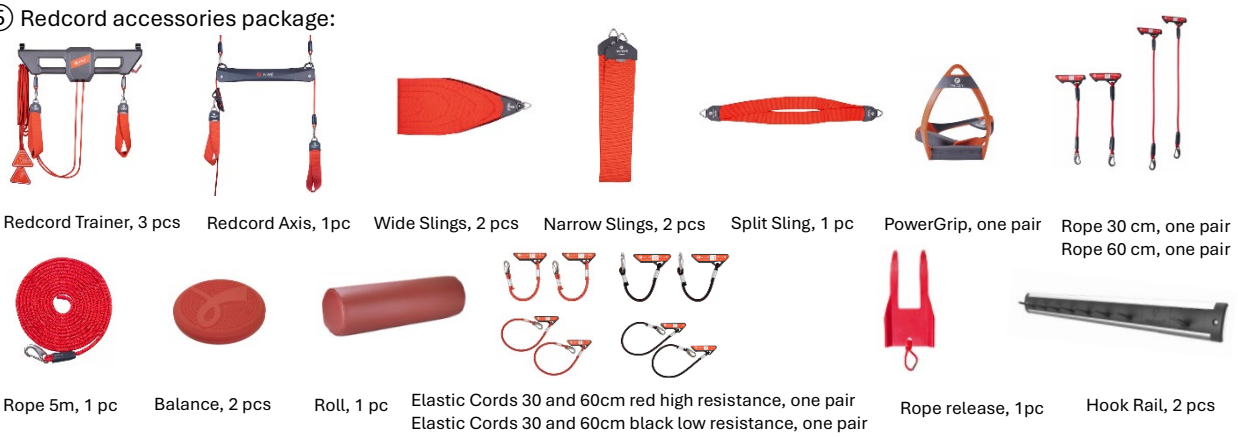

1.2.1. Contents of the Support Frame

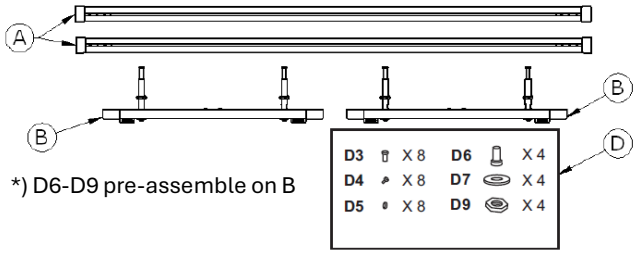

*) D6-D9 pre-assemble on B

Figure 3. Content of the support frame.

Designation	Quantity	Name/Description
A	2	Aluminum sections (L=180 cm) with inserts and 4 black plastic caps.
B	2	Crosspieces with special caps (L=77 cm) and legs. Single pulley is built-in for each (2) crosspieces.
D3	8	Screw M6x14, bit 5
D4	8	Washer M6
D5	8	Plastic plug
D6	4	Screw 10x35, bit 6
D7	4	Washer M10
D9	4	Nut M30

Table 1. Parts list corresponding to Figure 1.

1.2.2. Contents of the Traverse

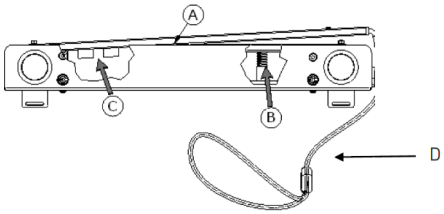

Figure 4. A traverse in side-view with content described in Table 2.

Designation	Quantity	Name/Description
A	1	Traverse with brake system. Pre-assembled; ready for use.
B	1	Spring.
C	1	Set of additional brakes (can be unscrewed and used as replacement for the damaged brake).
D	1	Brake rope

Table 2. Parts list corresponding to Figure 2

1.2.3. Contents of the Redcord Floor Stand

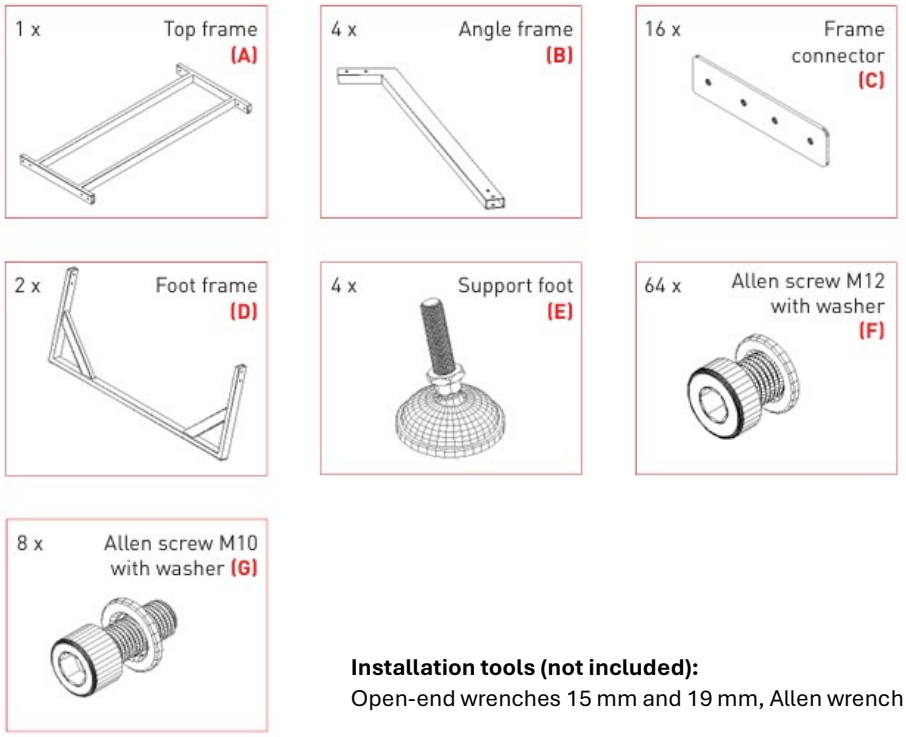

Installation tools (not included):
Open-end wrenches 15 mm and 19 mm, Allen wrench 8 mm, 1–2 ladders

Figure 5. Content of Redcord Floor Stand, REF120050

1.3. Contraindications to use

- Injuries and diseases where loading is contraindicated should not involve the affected area. E.g., acute fractures and acute tendon ruptures.
- If you have any doubts concerning your health, consult your physician before you start the training/therapy.
- Stop exercising if you feel pain or discomfort and consult a doctor or physiotherapist.

1.4. Precautions

- Allied health professionals should follow general guidelines for exercise therapy when using Redcord equipment, including contraindications related to the patient's diagnosis.
- Individuals suffering from medical conditions predisposing them to potential risks during physical exertion should only engage with the device after consulting with their treating physician or a qualified healthcare practitioner.
- **Possible reactions**: The materials used for Redcord products are generally considered safe and non-toxic.
  In rare cases, direct skin contact with the accessories may cause allergic reactions. Direct skin contact is therefore not recommended. For hygiene reasons, it is recommended to perform training or therapy in light, loose clothes made from natural materials, such as cotton. Elastic cords contain natural rubber latex, which may cause an allergic reaction in individuals. LATEX

2. Installation and proper use

2.1. Information before installation

- Before you start to install the Redcord Floor Stand, check the condition of all components. If any part shows signs of wear, cracks, deformation, corrosion, or missing hardware, **do not use.**
- Installation should be performed by trained personnel, preferably by two people.
- Install the frame in its final location and avoid relocating the fully assembled structure. If relocation is unavoidable, first remove any accessories and fully unload the frame; move it with at least two persons and suitable lifting equipment; do not drag it; recheck stability and retighten all fasteners after relocation.

Redcord takes no responsibility for any personal or physical damage that might arise due to incorrect installation and/or incorrect use of Redcord equipment.

2.2. Technical information

Redcord Floor Stand
Maximum load: 200 kg

Weight: 126 kg
Total dimensions:
Height: 240-245 cm
Width: 260 cm
Depth: 190 cm

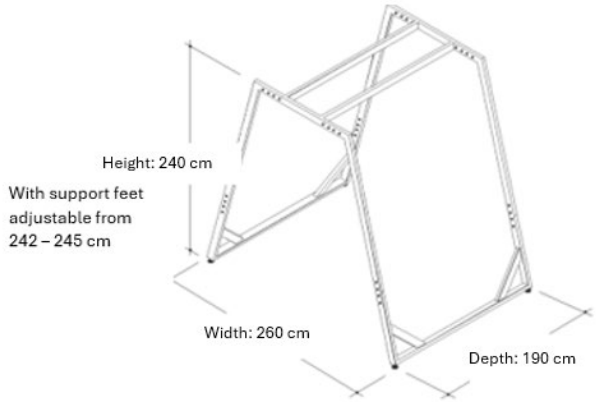

Figure 6. Dimension of Redcord Floor Stand, REF120050

Sliding Suspension System III
Maximum load: 200 kg

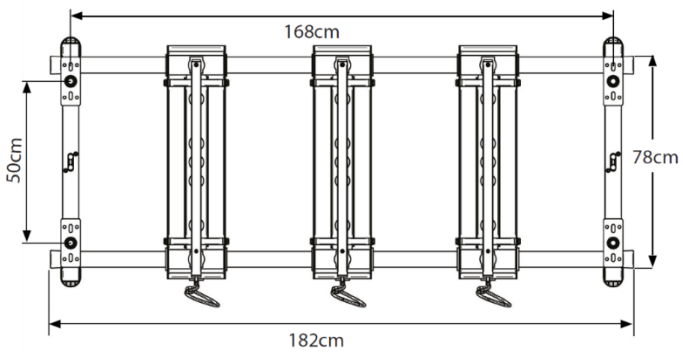

Figure 7. Dimension of Redcord Sliding Suspension System, REF 120203-1

2.3. Assemble the Redcord Floor Stand

Step 1 Assembly of Redcord Floor Stand

At the beginning, insert and start all Allen screws by hand. Note that the frame connectors are a bit flexible. This makes it easier to insert the connector and fasten it to the appropriate frame

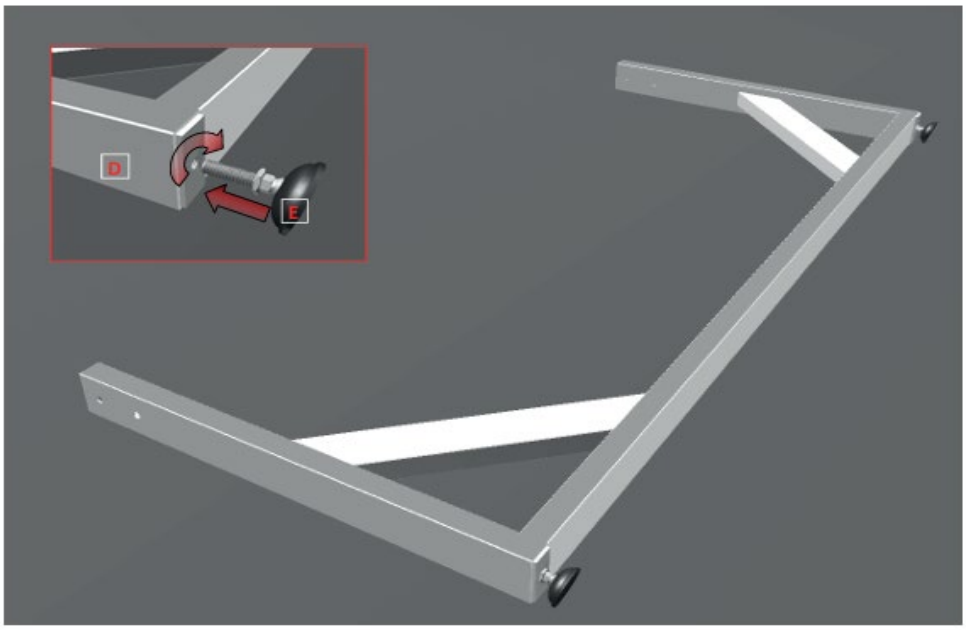

Figure 8 - Attaching the support foot (Figure 5-E) to the foot frame (Figure 5-D).

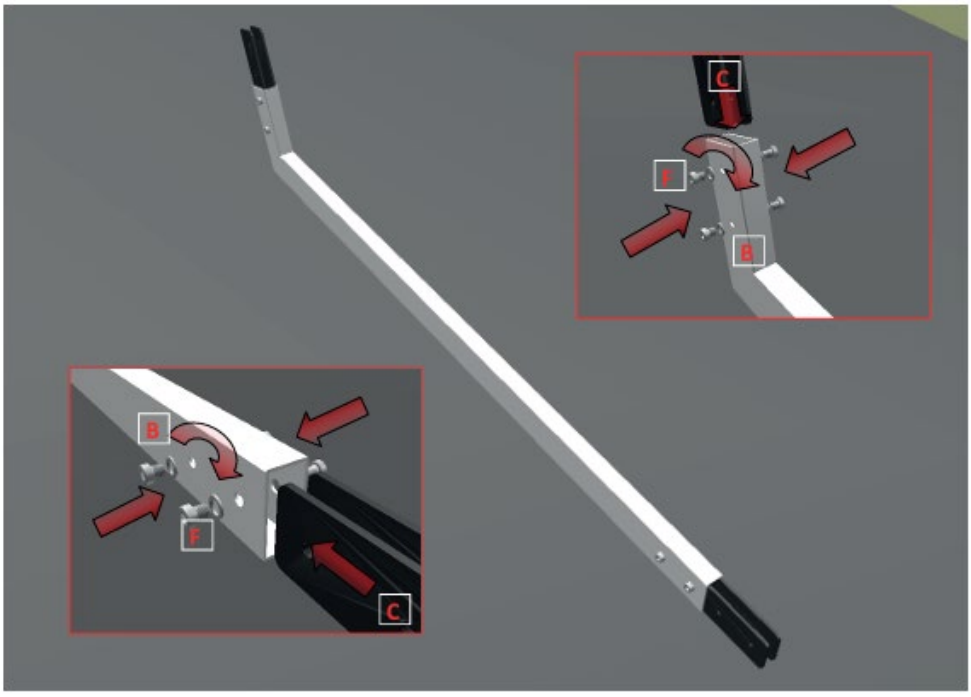

Figure 9 - Attaching the frame connector (Figure 5-C) to the angle frame (Figure 5-B) using the Allen screw (Figure 5-F).

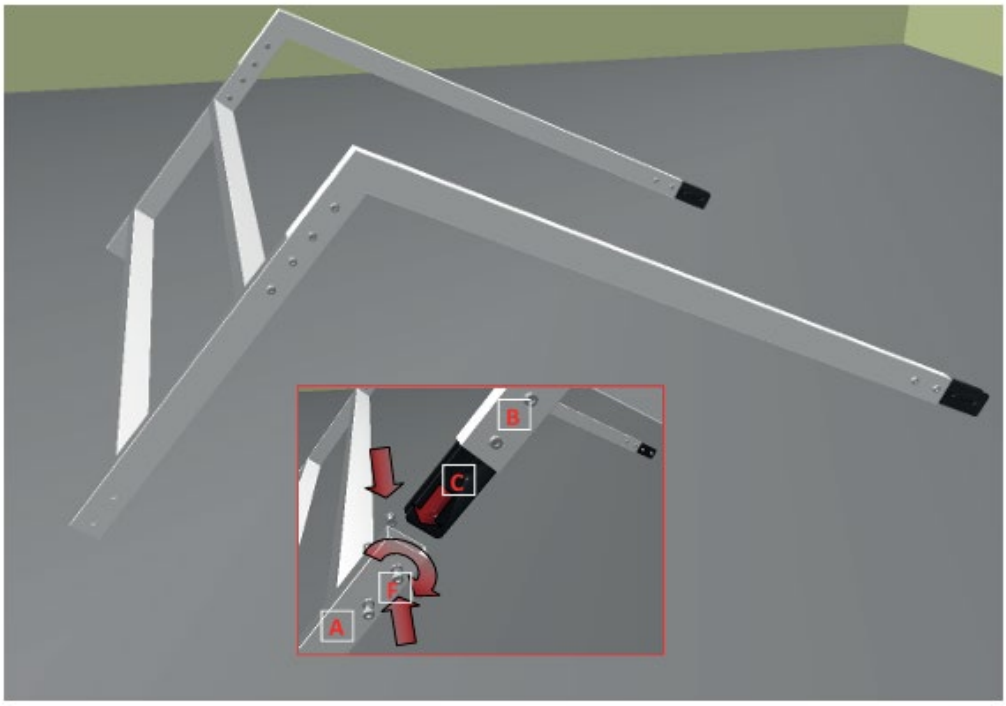

Figure 10 - Attaching the top frame (Figure 5-A) to the angle frame (Figure 5-B) using frame connector (Figure 5-C).

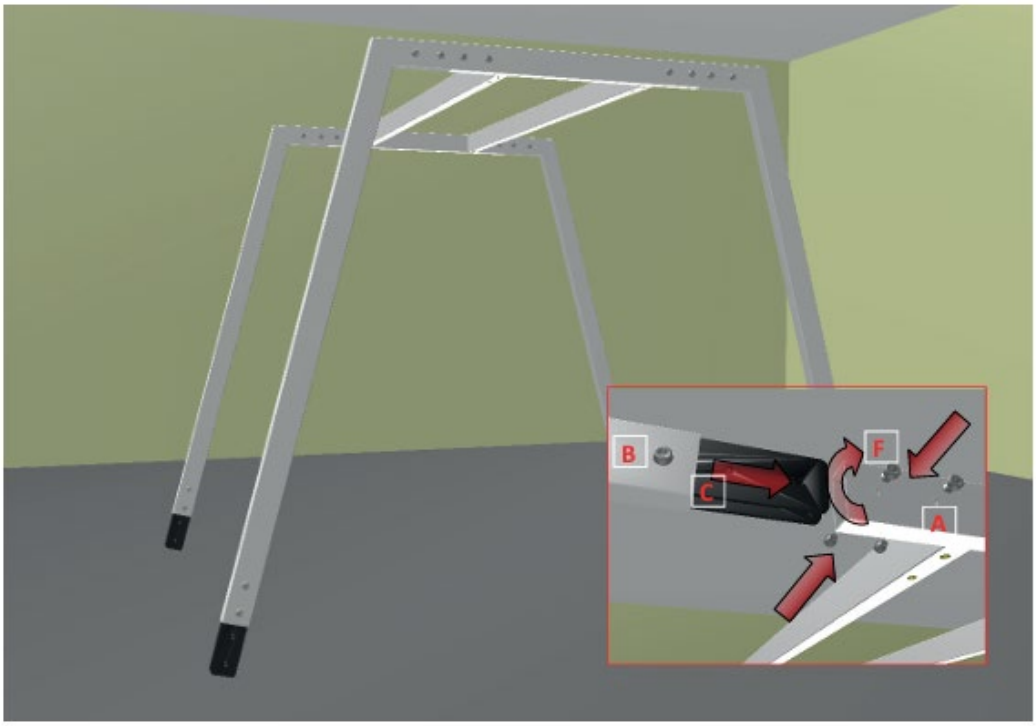

Figure 11 Attaching the angle frame (Figure 5-B) to the top frame (Figure 5-A) using frame connector (Figure 5-C) and Allen screws M12 with washer (Figure 5-F) – front view.

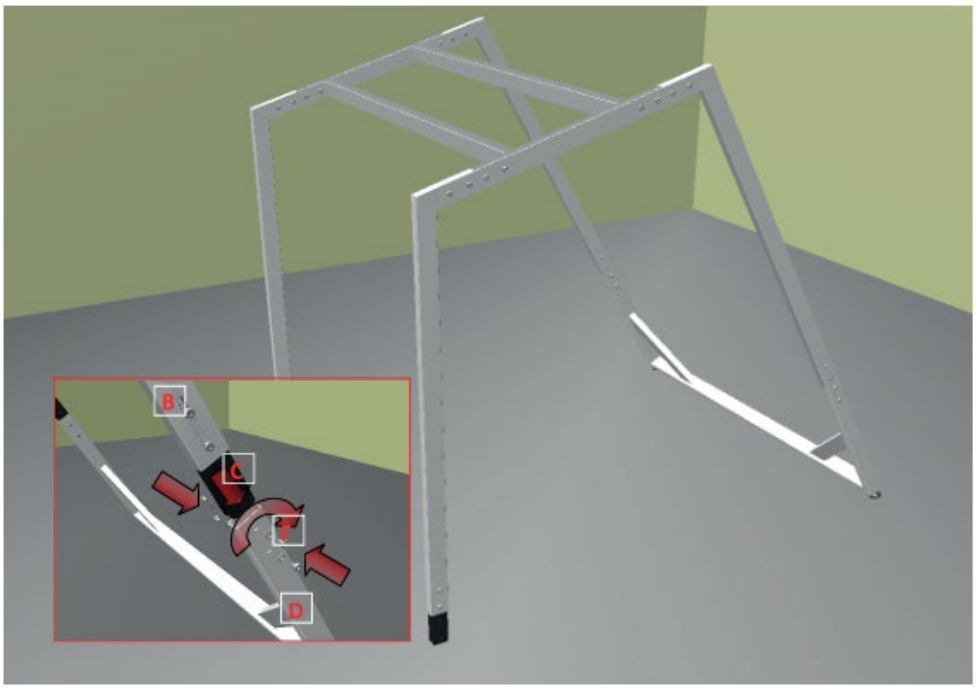

Figure 12 - Attaching the angle frame (Figure 5-B) to the top frame (Figure 5-A) using frame connector (Figure 5-C) and Allen screws M12 with washer (Figure 5-F) – side view.

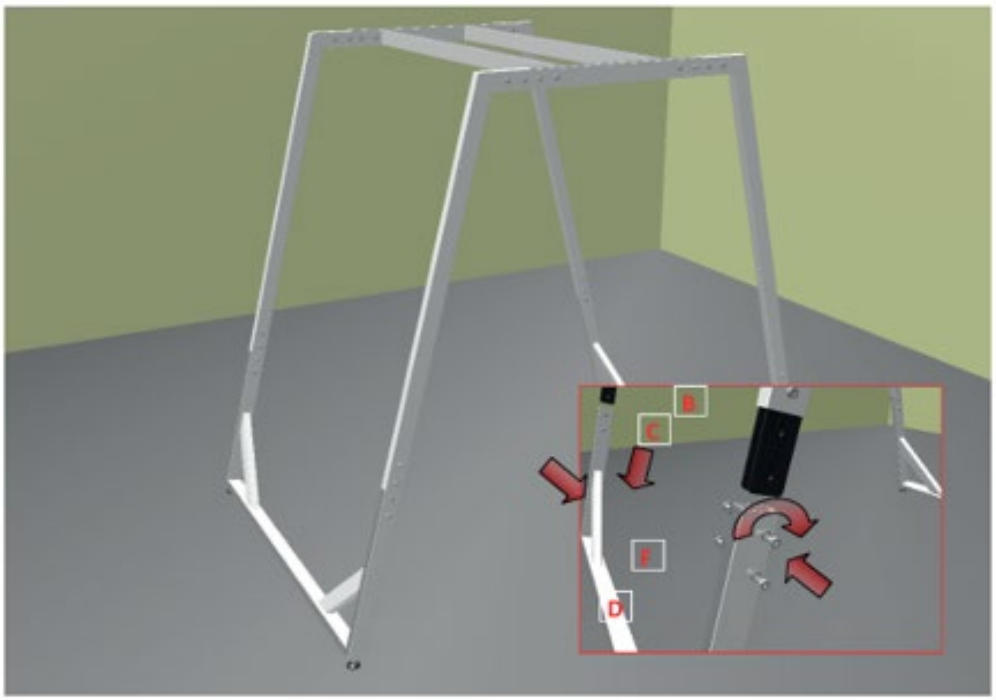

Figure 13 - Tighten all screws well after final assembly.

Step 2 Assembly of Redcord SSS III on Floor Stand

Turn the additional legs on both crossbars (Figure 3-B) to 90°. The slots must face the assembly, all in the same direction.

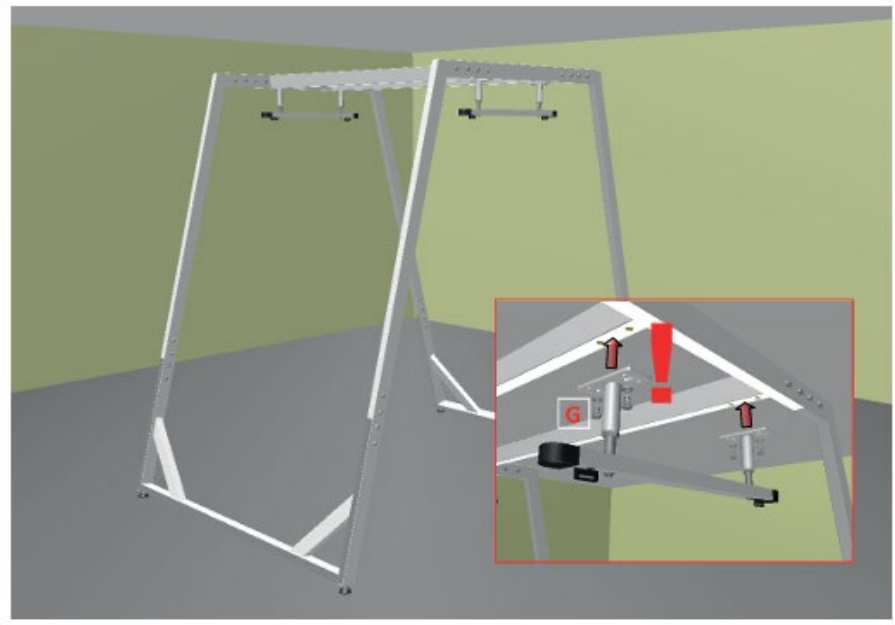

Figure 14 – Installing additional legs.

Unpack the traverse, lift the release arm as high as possible and put the spring (B) in place (Figure 15).
Pull the brake rope (D) down, so that the spring is fully compressed, and fasten it (the rope) in the cleat [i.e., rope lock] (E).
You can then easily slide the traverse onto the aluminum rails/tubes.

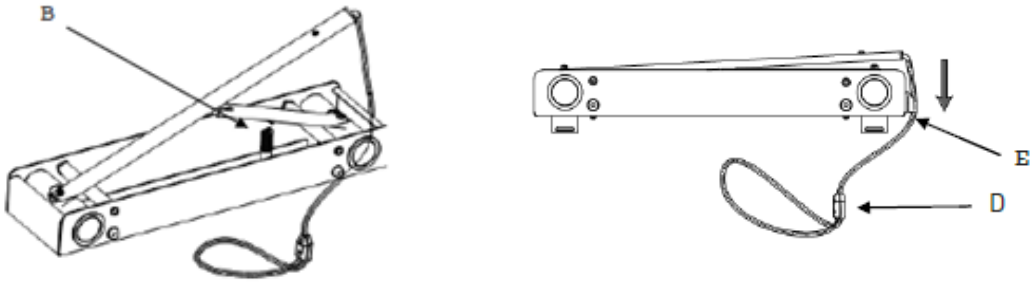

Figure 15 The location on the traverse where the spring screw should be placed.

The long rail (Figure 3-A) can temporarily be secured to the cross piece (Figure 3-B) with a rope. Slide the traverses onto the rails. Then fasten the rails to the cross piece with screws. Ensure that the brackets on the traverse are facing up, and the brake lever arm is facing down. Ensure that both of the brake arms and the ropes are on the same side of the SSS.

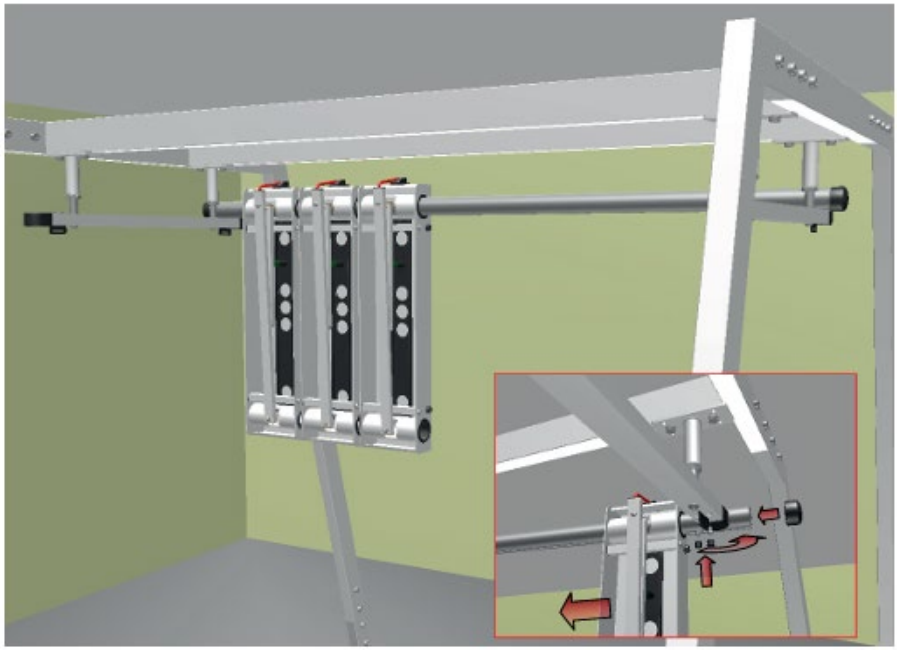

Figure 16 - Attaching the traverse to the Sliding Suspension System (SSS).

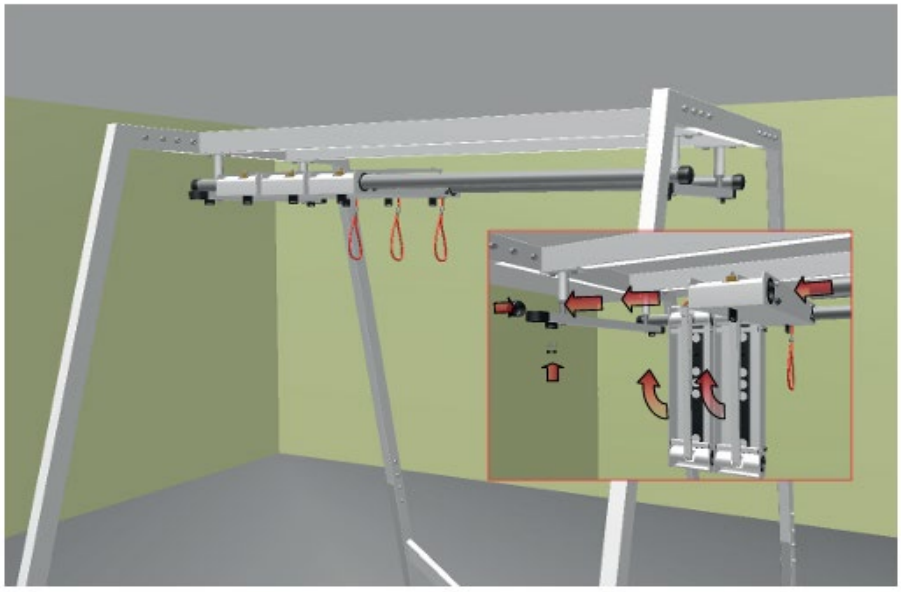

Figure 17- Fasten the long rails to the cross piece with screws

2.4. Operating the traverse

The traverses can be released and easily moved back and forth on the aluminum section during treatment or exercise. After reaching the desired position, the traverse should be set in the locked position.
Releasing the brake/traverse: to release the brake/traverse, pull down the brake rope and fasten it in the cleat (E). The traverse can now be pulled and moved in the required direction
Locking the brake/traverse: to lock the brake/traverse, pull the brake rope simultaneously down and release it out from the cleat. The brake/traverse is locked when the rope is let loose.

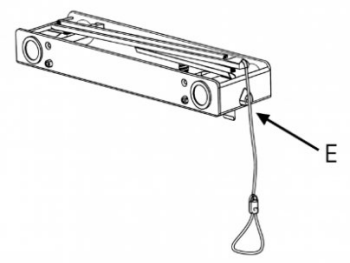

Figure 18 Released traverse

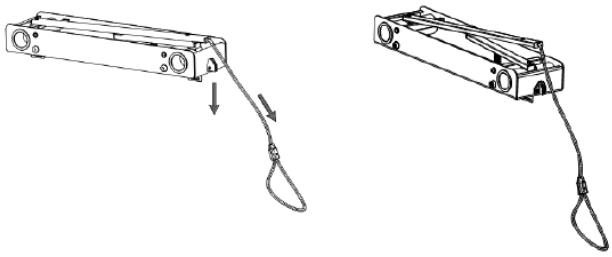

Figure 19 Locked traverse

3. Safety and maintenance

3.1. Warnings and Cautions

This section contains important information to ensure safe installation, use, and maintenance of the Redcord Workstation Professional, Floor Stand. Read all warnings and cautions carefully before assembly or operation.
General warnings:

- Perform regular safety inspection - check the condition of all components. If any part shows signs of wear, cracks, corrosion, deformation, or missing hardware, do not use.
- Ensure that all screws, bolts, and anchors are tightened and that the construction is stable before loading.
- Stop using immediately if instability or damage is observed.
- Do not modify any Redcord components or accessories.
- Redcord AS is not responsible for damage resulting from incorrect installation or use of non-original components.

Operational warnings:

- The traverses in the Redcord Workstation can be unlocked, moved, and positioned as desired by the user. However, the traverses must be properly locked before loading (see figure 19, 20).



Figure 19 Traverse - unlocked position

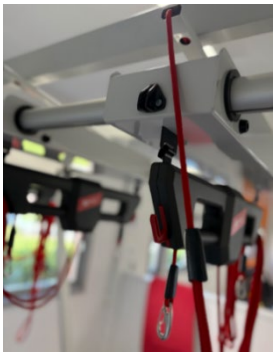

Figure 20 Traverse - locked position

- Ensure that the ropes in the Redcord Trainer are securely locked before loading or attaching accessories.
- Freeing the ropes for height adjustment should be done by pulling the ropes down before angling and pulling them out of the locking mechanism. This is to avoid heavy wear of the ropes in the locks.
- Additional accessories (e.g. straps) must be properly attached to the carabiner on the ropes (see figure 21).
- Elastic cords and 30/60 cm ropes must be attached to the Redcord Trainer via the rope lock (see figure 22).



Figure 21 Correct attached sling



Figure 22 Correct use of rope lock

- Avoid frequent stretching of the elastic cords to their maximum length, as this increases wear and tear.
- Respect the maximum load limit of:
  - Redcord Workstation Professional: 200 kg.
  - Redcord Floor Stand: 200 kg
  - Redcord accessories (see detailed list in Table 3):

Redcord Trainer	Redcord Axis	Wide Sling	Narrow Sling	Split Sling	Strap	Power Grip	Rope 30/60cm	Elastic cords 30/60cm		Balance
								Red	Black	
200 kg (100 kg per bracket/rope)	200 kg (100 kg per bracket/rope)	150 kg	150 kg	100 kg	100 kg	100 kg	150 kg	20 kg	10 kg	150 kg
The specified load limits apply to one single unit (e.g., one sling, one strap, one rope, or one elastic cord).										

Table 3. Max load for Redcord

- Avoid shock loads (e.g. bouncing), which may permanently damage your slings.
- Avoid using slings/straps as a swing. Repetitive swing movements will involve much more wear and tear than normal use and may reduce strength permanently.
- Never place the ropes around your neck, since this may cause strangulation, injury, or harm.

Storage and handling cautions

- Store the system indoors in a dry, cool place, away from direct sunlight, UV radiation, or chemicals.
- Avoid exposure to strong temperature variations and mechanical impact.
- Keep away from acids and other chemical agents that can damage fibers or coatings.
- Transport the system only in its original packaging to prevent deformation or scratching of metal parts.
- Improper storage can shorten product lifetime and compromise safety.

Cautions:

- Redcord elastic cords contain natural rubber latex, which may cause an allergic reaction in individuals sensitive to latex.
- Do not use incompatible accessories.
- Do not use lubricants (oil, grease, silicone) on aluminum sections or traverses.
- Inspect straps, slings, and other components regularly and never use the product that shows any visible damage (see Table 4)

	Lifetime	Wear signs
Redcord Rope 30/60 cm 5 m	4 years	If inspection reveals damage to the core. If it has been in contact with any active or dangerous chemicals. If the hook does not lock properly. If loose thread or the white kernel is visible on the rope. If the shape of the rope kernel is oval instead of round. If the cleat (i.e., rope lock) is damaged or worn out. If the cleat is sliding on the rope.
Redcord Slings, Strap	4 years	If the slings are bleached. If the webbing is flossy, crispy, or frayed. If the metal ring is split or divided. If the webbing shows signs of abrasion, cutting, or chemical dan If the stitching is frayed or broken. If it has been exposed to active or aggressive chemicals. If there are doubts about their safety.

Redcord Elastic Cords	2 years	If inspection reveals damage to the core. If it has been in contact with any active or dangerous chemicals. If there is the slightest doubt about its security. If the maximum load limit is exceeded. If expanded to maximum length. If the hook is damaged. If the cleat (rope lock) is sliding on the rope. If the cleat is damaged or worn out.	

Table 4. Lifetime and wear signs

Any **serious incident** that has occurred in relation to the device should be reported to the manufacturer and to the competent authority of the Member State in which the user or patient is located, in accordance with applicable national requirements.

3.2. Storage and transport

- Store indoors in a dry, cool place away from potential sources of contamination, mechanical impacts, and strong temperature variations. Avoid exposure to UV radiation and direct sunlight.
- Keep away from chemical agents, especially acids, which can cause invisible fiber degradation.
- The device should be transported in its original packaging. It is important to ensure that all metal components of the SSS III are securely protected during transport to avoid scratches, dents, or deformation.
- **Disposal:** Redcord products do not contain hazardous substances. Components made of plastic, metal, and textile can be disposed of or recycled in accordance with local regulations.

⚠ **CAUTION**: Improper storage of Redcord products can shorten their lifetime and reduce safety.

3.3. Cleaning and disinfection – reprocessing information

Not intended to be sterilized.

Before use and between users: inspect the external surfaces for damage or wear. Clean the contact surfaces. If required by local hygiene procedures, disinfect them with a non-corrosive, hospital-grade disinfectant compatible with painted/anodized metal and plastics. Wipe off residues and let the product dry completely.

Cleaning the Redcord Sliding Suspension System III (SSS III)

- Clean with a soft cloth moistened with water or a mild cleaning agent (e.g., soft soap).
- Disinfectants are permitted.
- Do not use abrasive cloths, scrubbing powders, or solvents such as spirit or petrol.
- Use a vacuum cleaner or dry cloth to remove dust, including the inner side of the traverses.
- Do NOT use lubricants (e.g., oil, grease, silicone) on aluminum sections or traverses; they can reduce or disable the brake function, attract dust and increase friction, and lead to poor system operation.
- **Tip:** Washing the aluminum rails will often improve braking. Dust may accumulate and reduce the effect between the brake block and the rails.

Cleaning the Redcord Trainer/Axis

- Clean with a soft cloth moistened with water or a mild cleaning agent (e.g., soft soap).
- Disinfectants are permitted.
- **Do not use** abrasive cloths, scrubbing powders, or solvents such as spirit or petrol.

Cleaning the Redcord Accessories (slings, ropes, elastics)

- Clean with a soft brush and hand-hot soapy water or with a solution of household detergent (e.g. washing-up liquid).
- **Drying:** Air dry only. Avoid direct sunlight, drying cabinets, or heat sources (e.g., radiators).

Important Precautions:
Do NOT use fabric softeners/rinsing agents.
Do NOT use benzine and other stain removers to clean.
Do NOT disinfect with hot steam.
Do NOT dry in sunlight or by using a drying cabinet.
Do NOT use chlorine-based bleach (sodium hypochlorite).
Avoid contact with chemical agents, especially acids, which may invisibly damage the fibers.
End of use (withdrawal): Do not reuse if there is any damage or excessive wear. See Table 4

4. Accessories and Replacement Parts

Extra accessories (optional, can be ordered separately)

▪ Redcord Trainer	REF 110010
▪ Redcord Wide Sling	REF 111001
▪ Redcord Narrow Sling	REF 111002
▪ Redcord Split Sling	REF 111003
▪ Redcord Elastic cord 30 cm, red, high resistance, one pair,	REF 113001
▪ Redcord Elastic cord 30 cm, black, low resistance, one pair,	REF 113002
▪ Redcord Elastic cord 60 cm, red, high resistance, one pair,	REF 113100
▪ Redcord Elastic cord 60 cm, black, low resistance, one pair,	REF 113101
▪ Redcord Mat	REF 130120

Replacement parts (maintenance)

▪ Redcord Traverse extra,	REF 120201
▪ Redcord Trainer,	REF 110010
▪ Redcord Axis,	REF 110050-1
▪ Redcord Strap, one pair	REF 111200
▪ Redcord Wide Sling,	REF 111001
▪ Redcord Narrow Sling,	REF 111002
▪ Redcord Split Sling,	REF 111003
▪ Redcord Rope, red, 30 cm, one pair,	REF 112001
▪ Redcord Rope, red, 60 cm, one pair,	REF 112020
▪ Redcord Elastic cord 30 cm, red, high resistance, one pair,	REF 113001
▪ Redcord Elastic cord 30 cm, black, low resistance, one pair,	REF 113002
▪ Redcord Elastic cord 60 cm, red, high resistance, one pair,	REF 113100
▪ Redcord Elastic cord 60 cm, black, low resistance, one pair,	REF 113101
▪ Redcord Brake Rope,	REF 112201
▪ Redcord Roll	REF 130210
▪ Redcord Rope Set for Upgrading	REF 140001
▪ Redcord Rope, red, 5 m	REF 112100

5. Various configurations/variants available on the market

Redcord Workstation Professional is available in the following configurations:

▪ Ceiling mounted:	Redcord Workstation Professional, REF 100023-5
▪ Wall mounted:	Redcord Workstation Professional, Wall Stand, REF 100123-5
▪ Floor mounted:	Redcord Workstation Professional, Floor Stand, REF 100223-5

6. Warranty Terms

Warranty

2 years. The warranty covers any faults in materials or manufacture. The warranty period runs without interruption for a period of 24 months from the delivery date of the products from Redcord AS. Exclusions from the guarantee: normal wear and tear, modifications or alterations, incorrect storage, poor maintenance, negligence, improper or incorrect usage. The warranty is valid only if there are deficiencies in the product, i.e., it is clearly wrong according to the technical specification and how the product is intended to be. Incorrect use and normal wear and tear are not eligible for claim. Redcord ‘s obligations pursuant to this warranty are limited to repair or replacement.

7. Explanation of symbols and abbreviations

	Symbol Glossary
CE	This medical device complies with the general safety and performance requirements of Regulation (EU) 2017/745 for medical devices.
MD	Medical Device
UDI	Unique device identifier (UDI) The product label includes a UDI for traceability.
	Manufacturer
LOT	Batch code
REF	Catalogue number (REF)
	Caution
	Keep dry
	Keep away from sunlight
LATEX	Contains natural rubber latex
	Consult Instructions for Use



Contact and technical support
Redcord AS,
Teknologiveien 11, NO-4846 Arendal, Norway
redcord@redcord.com +47 37 03 00 00
Local Distributors: www.redcord.com