Redcord Workstation Professional, Wall Stand

REF: 100123-5

Instructions for Use / EN



Redcord AS
Teknologiveien 11
NO-4846 Arendal, Norway

CE MD

Contents

1. General information on Redcord Workstation Professional, Wall Stand 3
1.1. Intended Purpose 3
1.2. Contents of the Redcord Workstation Professional, Wall Stand 3
1.2.1. Contents of the Support Frame 4
1.2.2. Contents of the Traverse 4
1.2.3. Contents of the Redcord Wall Stand 4
1.3. Contraindications to use 6
1.4. Precautions 6
2. Installation and proper use 6
2.1. Information before installation 6
2.2. Technical information 7
2.3. Positioning the Redcord Wall Stand 7
2.4. Assemble the Redcord Wall Stand 7
2.5. Assemble the Sliding Suspension System for Wall Stand 12
2.6. Operating the traverse 15
3. Safety and maintenance 15
3.1. Warnings and Cautions 15
3.2. Storage and transport 17
3.3. Cleaning and disinfection – reprocessing information 17
4. Accessories and Replacement Parts 18
5. Various configurations/variants available on the market 18
6. Warranty Terms 19
7. Explanation of symbols and abbreviations 19

1. General information on Redcord Workstation Professional, Wall Stand

1.1. Intended Purpose

The Redcord Workstation Professional is used for treatment. It creates a system of multiple movable suspension points for the suspension of more body parts simultaneously. This enables:

- Performing body-weight-bearing exercises (closed kinetic chain) with involvement reaching from selected body segments to complete kinetic chains, where the ropes provide an unstable base of support with increased freedom of movement.
- Offloading body weight to adapt to patient's load tolerance and capacity when doing body-weight-bearing exercises.
- Performing open kinetic chain exercises reaching from pendular movements with little or no resistance to movements resisted by elastic cords providing different levels of resistance.
- Performing exercises containing rotational movements using the Redcord Axis.
- Providing a helping hand offloading the health care professional by suspending one or more body parts or the entire body while performing passive or active assisted movements and techniques or enabling pain-free positioning of a limb, body part, or the entire body.

Intended Medical Indication: Testing, treatment, and prevention of musculoskeletal disorders and in the rehabilitation of neurological disorders, rheumatological disorders, chronic pain, and after trauma. It is also indicated in the treatment of generally deconditioned rehabilitation patients and individuals with motor deficits.

Intended patient population: Orthopedic, traumatological, rheumatological, neurological, and chronic pain patients, generally deconditioned rehabilitation patients, and individuals with motor deficits, in all age groups and levels of functional limitations.

Intended User: It is intended for use by Healthcare and Exercise professionals. Education related to use is recommended but not mandatory. This device is intended for multiple-patient, multiple-use. Follow the cleaning and maintenance instructions to ensure safe reuse.

Environment of use: Redcord Workstation Professional should be used only in an indoor environment.

1.2. Contents of the Redcord Workstation Professional, Wall Stand

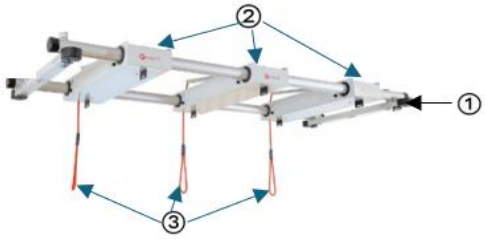



① Support frame of the (special version of) Sliding Suspension System III for wall stand. (with mounting legs attached).
② Traverses, 3 pcs
③ Brake rope (attached in each Traverse)
④ Wall Stand
⑤ Redcord accessories package:


Redcord Trainer, 3 pcs


Redcord Axis, 1pc


Wide Slings, 2 pcs


Narrow Slings, 2 pcs


Split Sling, 1 pc


PowerGrip, one pair


Rope 30cm, one pair
Rope 60cm, one pair


Rope 5m, 1 pc


Balance, 2 pcs


Roll, 1 pc


Elastic Cords 30 and 60cm red high resistance, one pair
Elastic Cords 30 and 60cm black low resistance, one pair


Rope release, 1pc


Hook Rail, 2 pcs

Figure 1. Content of the Redcord Workstation Professional, Wall Stand

1.2.1. Contents of the Support Frame

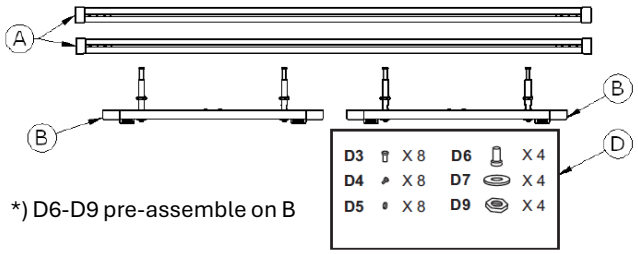

Figure 2. Content of the support frame.

Designation	Quantity	Name/Description
A	2	Aluminum sections (L=180 cm) with inserts and 4 black plastic caps.
B	2	Crosspieces with special caps (L=77 cm) and legs. Single pulley is built-in for each (2) crosspieces.
D3	8	Screw M6x14, bit 5
D4	8	Washer M6
D5	8	Plastic plug
D6	4	Screw 10x35, bit 6
D7	4	Washer M10
D9	4	Nut M30

Table 1. Parts list corresponding to Figure 2.

1.2.2. Contents of the Traverse

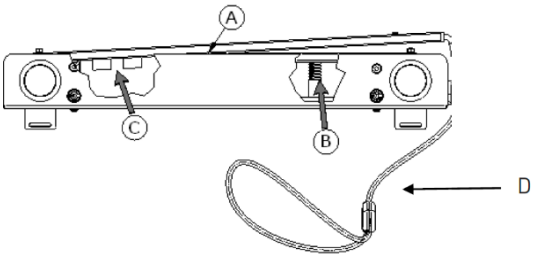

Figure 3. A traverse in side-view with content described in Table 2.

Designation	Quantity	Name/Description
A	1	Traverse with brake system. Pre-assembled; ready for use.
B	1	Spring.
C	1	Set of additional brakes (can be unscrewed and used as replacement for the damaged brake).
D	1	Brake rope

Table 2. Parts list corresponding to Figure 3.

1.2.3. Contents of the Redcord Wall Stand

① Wall Fixation System
② Intersection
③ Suspension Frame for Wall Stand
④ Black corner to frame
⑤ Legs for Wall Stand
⑥ Foot for Wall Stand
⑦ Fixation Plates for Trainer

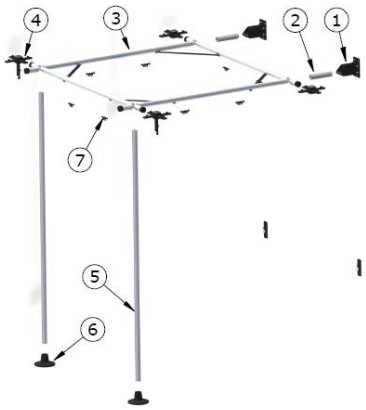

Figure 4. Content of Redcord Wall Stand

① Wall Fixation System



2x Wall mounting plates | 2x Clamps | 2x Catch pawls | 10 sets | 14 sets | 1 set tools

Figure 5 Wall Fixation System

② Intersection

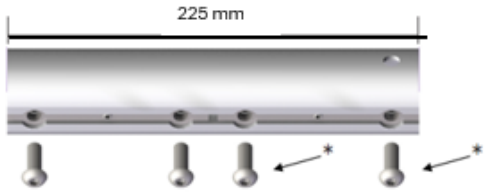

x 2 sets

*) Additional screw for mounting Redcord Wall Stand in parallel (x2, x4 – see figure15,16, 22,23)

Figure 6 Intersection for Wall Stand

③ Suspension Frame for Wall Stand

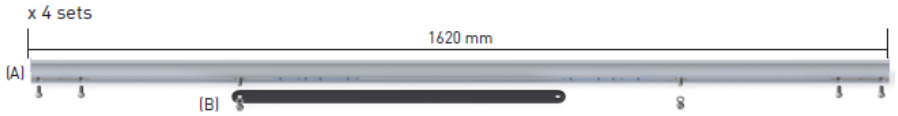

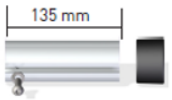

x 6 sets(C)



x 1 set

Figure 7 Suspension frame for Wall Stand

④ Black Corner to frame



x 2 sets (D) | x 2 sets (E)

Figure 8 Black corner to frame

⑤ Legs for Wall Stand

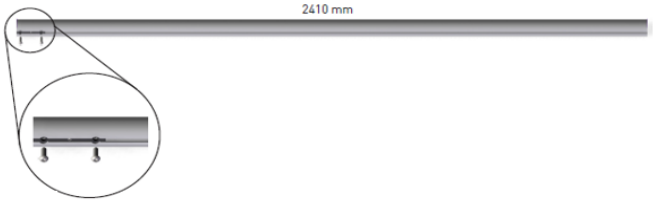

x 2 sets (F)

Figure 9 Legs for Wall Stand

⑥ Foot for Wall Stand



x 2 sets(G)



x 2 templates (H)



x 1 set distance washers (I) (2,3,5 mm)

Figure 10 Foot for Wall Stand

---

⑦ Fixation Plates for Trainer



x 4 sets

x 4 sets for 2 of Redcord Trainers (REF 110010)

Figure 11 Fixation plates for Trainer

1.3. Contraindications to use

- Injuries and diseases where loading is contraindicated should not involve the affected area. E.g., acute fractures and acute tendon ruptures.
- If you have any doubts concerning your health, consult your physician before you start the training/therapy.
- Stop exercising if you feel pain or discomfort and consult a doctor or physiotherapist.

1.4. Precautions

- Allied health professionals should follow general guidelines for exercise therapy when using Redcord equipment, including contraindications related to the patient's diagnosis.
- Individuals suffering from medical conditions predisposing them to potential risks during physical exertion should only engage with the device after consulting with their treating physician or a qualified healthcare practitioner.
- **Possible reactions**: The materials used for Redcord products are generally considered safe and non-toxic. In rare cases, direct skin contact with the accessories may cause allergic reactions. Direct skin contact is therefore not recommended. For hygiene reasons, it is recommended to perform training or therapy in light, loose clothes made from natural materials, such as cotton. Elastic cords contain natural rubber latex, which may cause an allergic reaction in individuals. LATEX

2. Installation and proper use

2.1. Information before installation

- Before you start to install the Redcord Workstation Professional, Wall Stand, check the condition of all components. If any part shows signs of wear, cracks, deformation, corrosion, or missing hardware, **do not use.**
- The wall must be inspected and confirmed as suitable for load-bearing installation. The wall fixation plates must be installed in solid material, not just panels or wallboards. The screws included in the package are only for installation on solid concrete and solid wooden beams.
- Installation should be performed by qualified personnel, with a minimum team of two people.
- Install the frame in its final location and avoid relocating the fully assembled structure. If relocation is unavoidable, first remove any accessories and fully unload the frame; move it with at least two persons and suitable lifting equipment; do not drag it; recheck stability and retighten all fasteners after relocation.

2.2. Technical information

Redcord Wall Stand
Weight: 49 kg
Total dimensions:
Height: 2450 mm
Width: 2016 mm
Depth: 2285 mm
Ceiling Height requirement:
minimum 2700mm

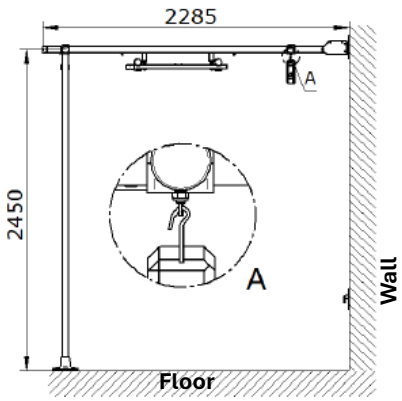

Figure 12 Front view of Wall Stand

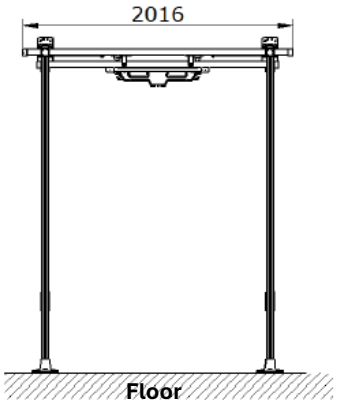

Figure 13 Side view of Wall Stand

Sliding Suspension System

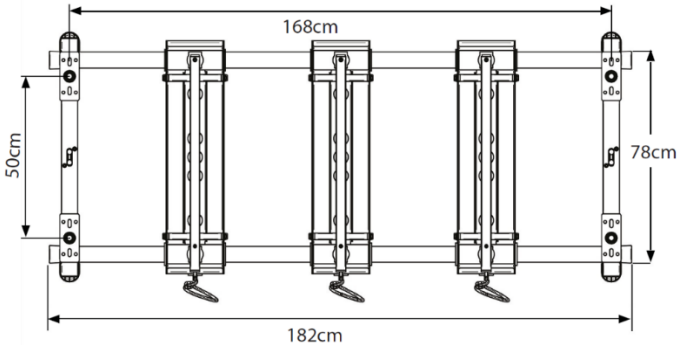

Figure 14. Top view of the SSS III, dimension

2.3. Positioning the Redcord Wall Stand

Redcord Wall Stand can be mounted parallel (Figure 15) or perpendicular (Figure 16) to the wall.



Figure 15 SSS installed parallel to the wall.



Figure 16 SSS installed perpendicular to the wall.

2.4. Assemble the Redcord Wall Stand

Step 1: Fix the wall mounting plate to the concrete or wooden wall

- Assemble legs and feet for Wall Stand.
- Take one of the suspension frame tubes (A) and assemble the rear crosses (E) on both sides of the suspension frame tube (A). Connect legs to the rear crosses.
- Screw the templates(H) to the wall mounting plates and mount another side of the template to the rear crosses(E).

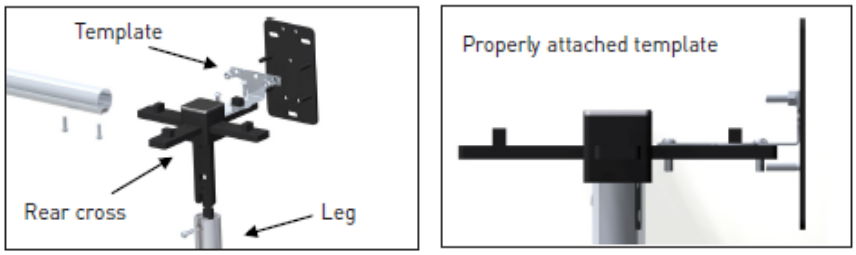

Figure 17-18, Properly attached template

- Put the assembled frame with the template(H) against the wall, and level it with the leveling tool included in the package. If the legs are not leveled, you can place 2,3 or 5mm distance washers(I) inside the feet to level the legs.

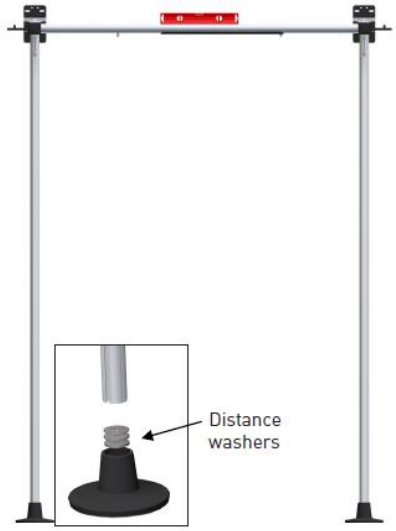

Figure 19 Step 1: Fixing the Wall Stand

- Mark the holes on the wall through the wall mounting plates.
- Drill the holes in the wall. (Pay attention to the wall type, concrete or wooden wall, see figures 20,21)
- Put the wall mounting plates on the wall and fasten them temporarily.
- Remove the templates and fix the wall mounting plates securely.

Dimension for concrete wall. Use segment anchors on the oval holes in the wall mounting plates.

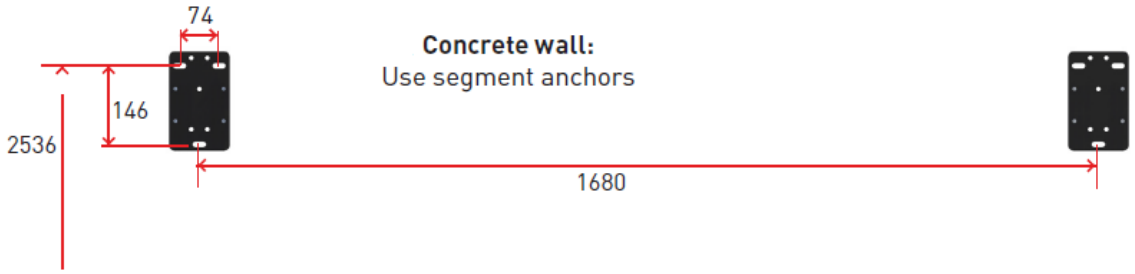

Figure 20. Anchor dimensions, concrete wall

Dimension for wooden wall. Use wood screws on the circular holes in the wall mounting plates.



Figure 21. Screw dimensions, wooden wall

Step 2: Assemble the suspension frame for Wall Stand

PAY ATTENTION TO NOT DAMAGE THE SURFACE OF THE BEAMS WHILE WORKING.

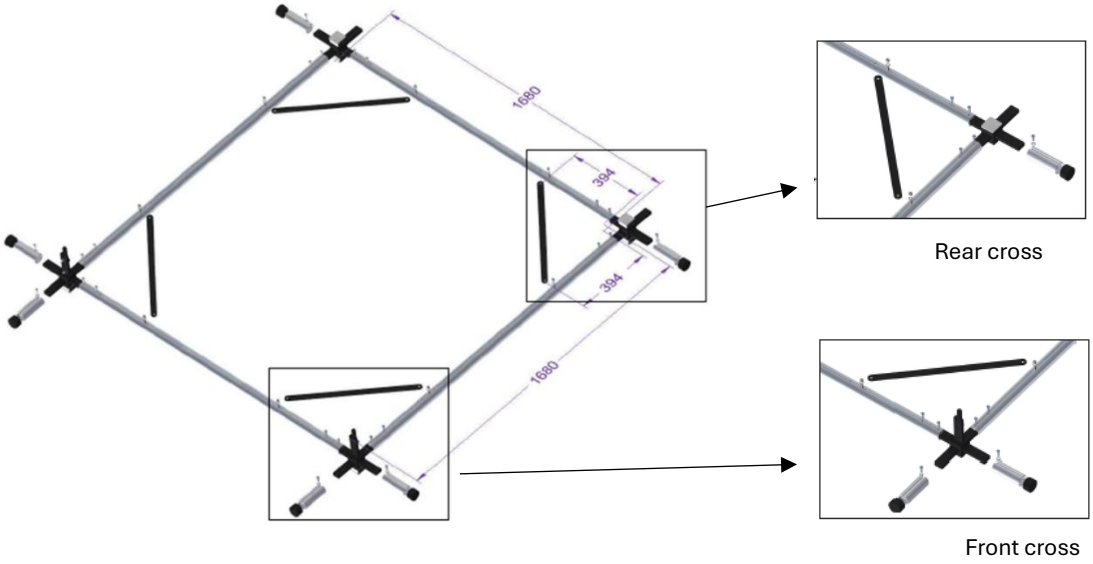

Figure 22 Step 2: Assemble the Suspension System for Wall Stand

Step 3: Attach the intersections (x2) to the Suspension Frame for Wall Stand

- Each intersection comes with 4 screws. Two go into the suspension frame, the remaining two are used when mounting multiple frames in parallel. PAY ATTENTION TO NOT DAMAGE THE SURFACE OF THE BEAMS WHILE WORKING.

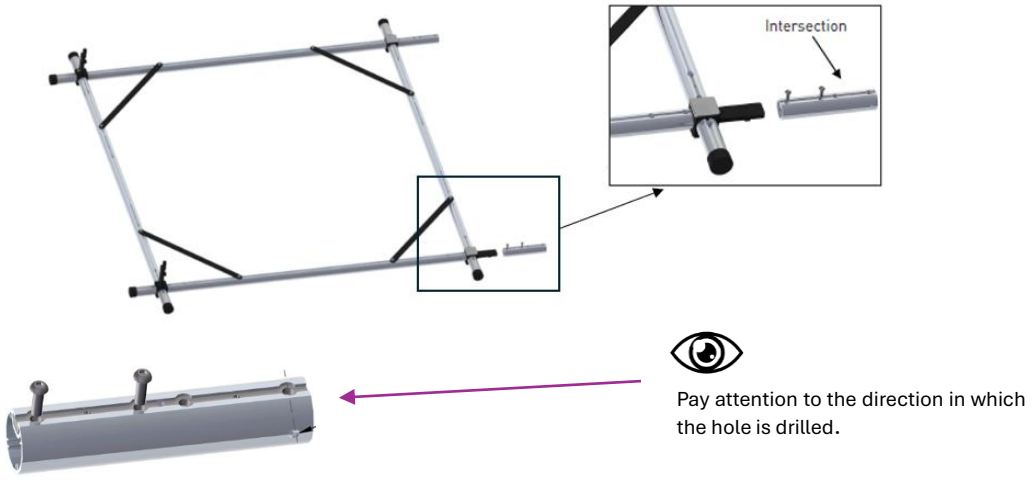

Figure 23 Step 3: Attaching the intersections (x2) to the suspension frame

Step 4: Attach the clamps to the Wall Mounting Plate

- Screw the normal nuts (x4) onto the pins on the wall mounting plate.
  (These nuts can be used for horizontal adjustments.)
- Put the round washers (x4) onto the pins.



- Put the clamps (x2) onto the pins and fasten them by using the washers (x4) and combi nuts (x4).
- Let the pins be allowed to move within the oval holes. These oval holes are used for height adjustment.



Figure 24 Step 4: Pre-assembling the wall mounting plate and attaching clamps.

Step 5: Mount the suspension frame for wall stand to the wall fixation system

- Fix the screws so as to allow the mounted frame to turn
  DO NOT TIGHTEN THE SCREWS AT THE CLAMPS PERMANENTLY YET! THE WHOLE CONSTRUCTION MUST BE LEVELED PROPERLY FIRST.



Figure 25 Step 5: Mounting the suspension frame to the wall stand.

Step 6: Mount the legs and feet to the Wall Stand

- Fasten the legs to the frame, temporarily only using one screw per leg.

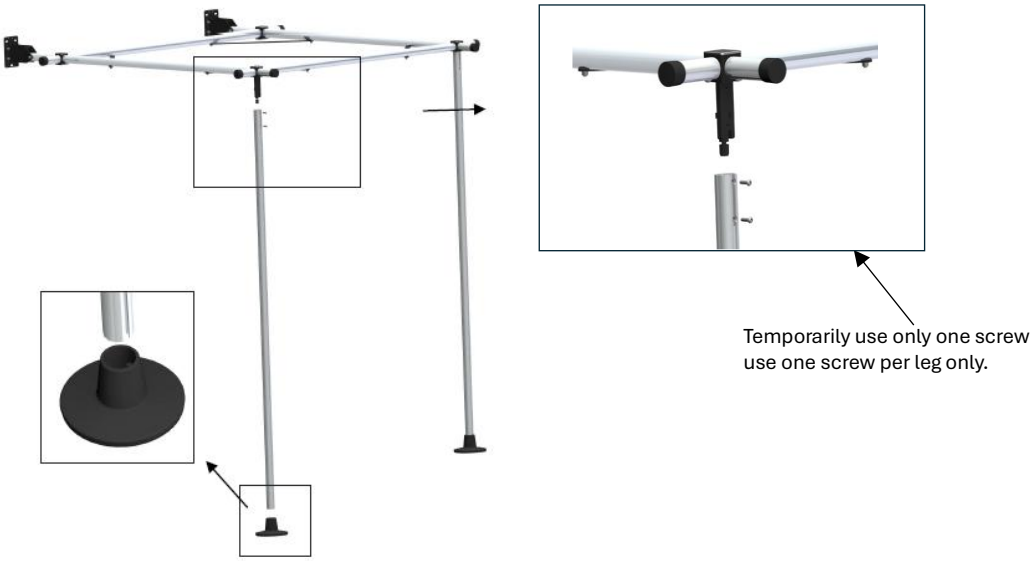

Figure 26 Step 6: Mounting the legs and feet to the suspension frame.

Step 7: Level and fix the system permanently – fasten the clamps to the wall mount plate.

- Adjust the legs to level the construction - use distance washers if necessary.
- Set the clamps in the correct position and fasten all the screws securely.

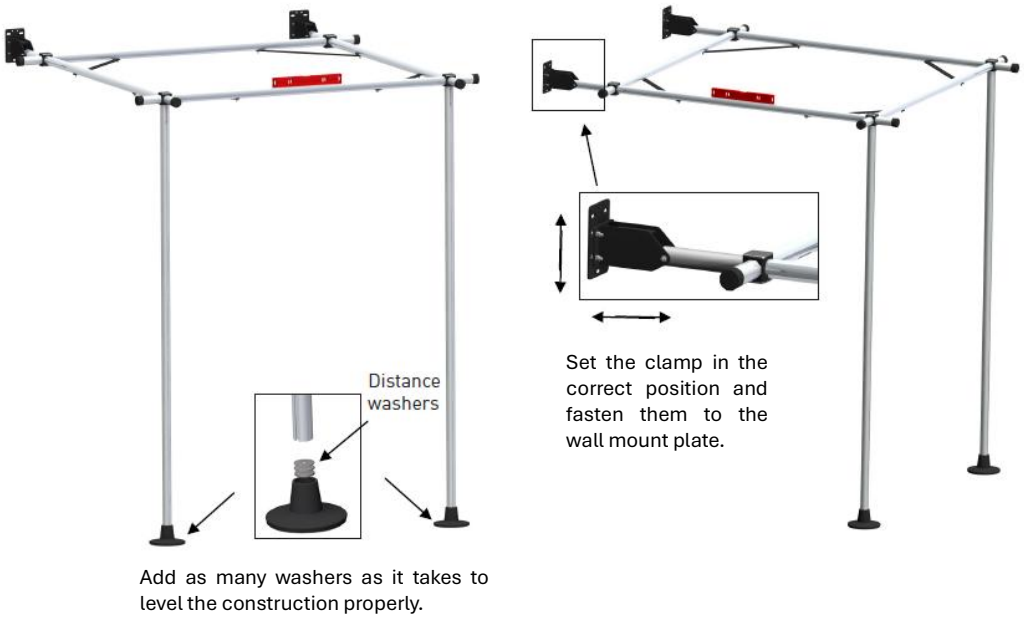

Figure 27 Step 7: Levelling the construction

Step 8: Install the catch pawls (used to secure the Wall Stand to the wall)

- Remove the legs and lower the framework so that it hangs against the wall.



Figure 28 Step 8: Installing the catch pawls

- Place each pawl assembly against the wall, lock it, and mark where the holes should go on the wall.
- Drill the holes and fasten the pawls to the wall using screws or anchors (depending on the wall type – wooden or concrete).



Figure 29 Step 8: Fastening the catch pawls to the wall



Figure 30 Illustration of the wall stand when it is secured to the wall

2.5. Assemble the Sliding Suspension System for Wall Stand

Please assemble the entire system on the floor before mounting it to the Wall Stand.

- Unpack the traverse, lift the release arm as high as possible and put the spring (B) in place (Figure 34).
- Pull the brake rope (D) down, so that the spring is fully compressed, and fasten it (the rope) in the cleat [i.e., rope lock] (E). You can then easily slide the traverse onto the aluminum rails/tubes.

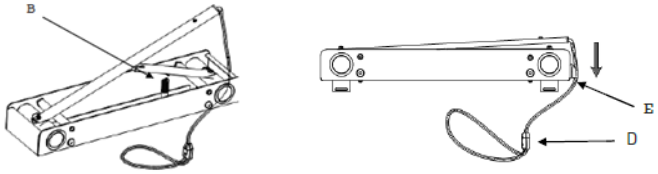

Figure 31 The location on the traverse where the spring screw should be placed.

- Assemble one crosspiece with the legs and the aluminum section. The aluminum section should be lying on the floor, with the crosspiece brackets facing upwards. Attach 2 screws (D3) to each end of the crosspiece. Put the black plugs (D5) in the screw hole after mounting is complete. Ensure that the safeguard (D8), the M30 nut (D9) and screw (D6) are fastened tight for the legs.



Figure 32 The aluminum section

- At the opposite end from the mounted crosspiece, temporarily remove the end caps on the aluminum section.
- Slide the traverse onto the aluminum sections/rails by passing the 2 rails through the holes in the traverse (Figure 33).

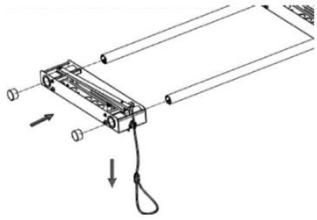

Figure 33 Sliding traverse

- Put the end caps back on the aluminum sections. Ensure that the brackets on the traverse are facing up, and the brake lever arm is facing down. Ensure that both brake arms and the ropes are on the same side of the SSS for all three traverses.



Figure 34 Assembling crosspiece with legs to the aluminum section.

- Put the end caps back on the aluminum sections. Ensure that the brackets on the traverse are facing up, and the brake lever arm is facing down. Ensure that both brake arms and the ropes are on the same side of the SSS for all three traverses.
- Before you mount SSS to the Wall Stand, move all three traverses back and forth, the traverses shall slide easily on the 2 rails. After the test has been performed, the Redcord Sliding Suspension System III is now ready for be mounted to the wall stand. To increase rigidity and eliminate the chance of moving the traverse along the aluminum sections when installing the SSS III to the ceiling, release the brake rope from the cleat again to keep the traverse locked.
- Mount the Redcord Sliding Suspension System (RSSS) to the Wall Stand (Figure 37).





Figure 35
Option 1: Mounting the RSSS to the Wall Stand parallel to the wall
Option 2: Mounting the RSSS to the Wall Stand perpendicular to the wall

(Optional) Install the Fixation Plates for the additional Redcord Trainer to the Wall Stand

The system allows mounting of two additional Redcord Trainer units (see Figure 38). You will need to purchase 2x Redcord Trainer (REF 110010) separately.

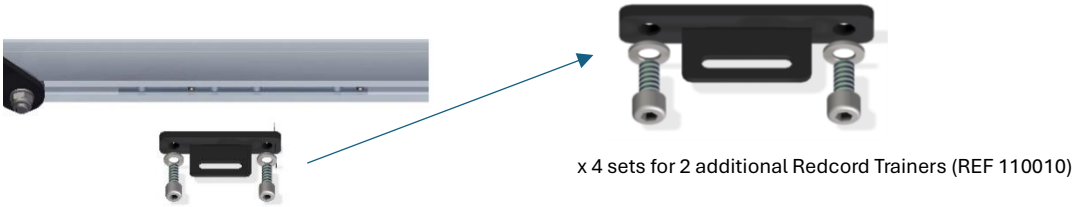

Figure 36 Fixation Plates for Redcord Trainer

Distance between the center point of the fixation plate = 600 mm

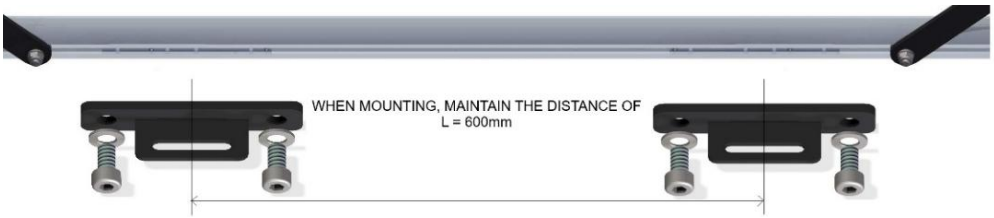

Figure 37 Distance between Fixation Plate for Redcord Trainer



Figure 38 Mounting additional Redcord Trainer to Wall Stand.

(OPTIONAL) Mount Multiple Wall Stands Together

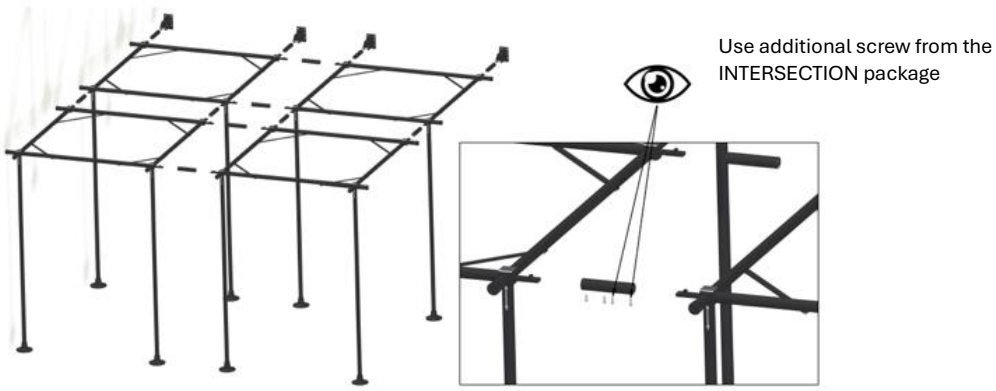

Figure 39 Mounting multiple Redcord Wall Stand (optional)

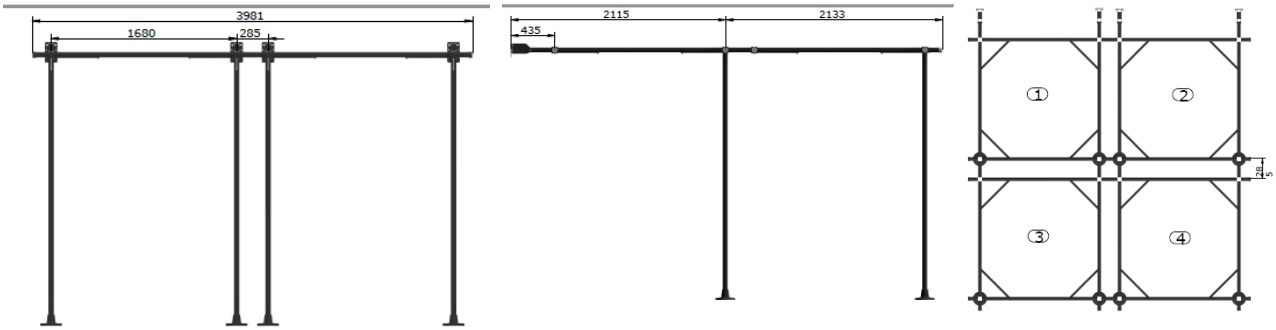

Figure 40 Top and front view of multiple Redcord Wall Stand mounted together (optional).

Make sure that all screws and nuts are tightened well and that the Redcord Wall Stand is stable in all directions. After installation/before use it, perform a functional load test with weight corresponding to the maximum intended load (see safety information).

2.6. Operating the traverse

The traverses can be released and easily moved back and forth on the aluminum section during treatment or exercise. After reaching the desired position, the traverse should be set in the locked position.
Releasing the brake/traverse: to release the brake/traverse, pull down the brake rope and fasten it in the cleat (E). The traverse can now be pulled and moved in the required direction
Locking the brake/traverse: to lock the brake/traverse, pull the brake rope simultaneously down and release it out from the cleat. The brake/traverse is locked when the rope is let loose.

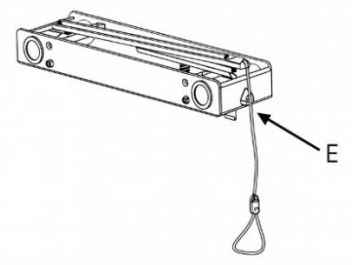

Figure 41. Released traverse

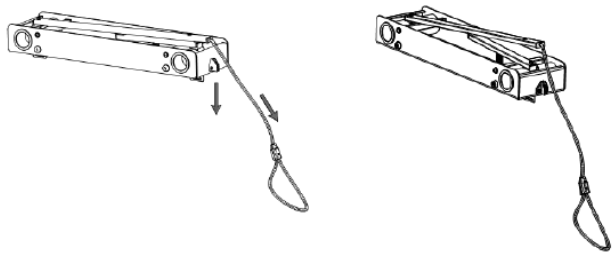

Figure 42. Locked traverse

3. Safety and maintenance

3.1. Warnings and Cautions

This section contains important information to ensure safe installation, use, and maintenance of the Redcord Workstation Professional, Wall Stand. Read all warnings and cautions carefully before assembly or operation.

General warnings:

- The wall structure must be load-bearing and suitable for installation in solid concrete or wooden beams — not into wall panels or lightweight materials (e.g., gypsum, SIPOREX, YTONG, LECA).
- Perform regular safety inspection - check the condition of all components. If any part shows signs of wear, cracks, corrosion, deformation, or missing hardware, do not use.
- Ensure that all screws, bolts, and wall anchors are tightened and that the construction is stable before loading.
- Stop using immediately if instability or damage is observed.
- Do not modify any Redcord components or accessories.
- Redcord AS is not responsible for damage resulting from incorrect installation or use of non-original components.

Operational warnings:

- The traverses in the Redcord Workstation Professional can be unlocked, moved, and positioned as desired by the user. However, the traverses must be properly locked before loading (see figures 43,44).



Figure 43. Traverse - unlocked position

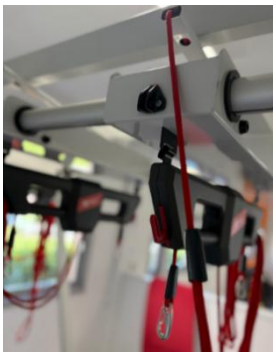

Figure 44. Traverse - locked position

- Ensure that the ropes in the Redcord Trainer are securely locked before loading or attaching accessories.
- Freeing the ropes for height adjustment should be done by pulling the ropes down before angling and pulling them out of the locking mechanism. This is to avoid heavy wear of the ropes in the locks.
- Additional accessories (e.g. straps) must be properly attached to the carabiner on the ropes (see figure 45).
- Elastic cords and 30/60 cm ropes must be attached to the Redcord Trainer via the rope lock (see figure 46).



Figure 45. Correct attached sling



Figure 46. Correct use of rope lock

- Avoid frequent stretching of the elastic cords to their maximum length, as this increases wear and tear.
- Respect the maximum load limit of:
  - Redcord Workstation Professional: 200 kg.
  - Redcord Wall Stand: 600 kg
  - Redcord accessories (see detailed list in Table 3):

Redcord Trainer	Redcord Axis	Wide Sling	Narrow Sling	Split Sling	Strap	Power Grip	Rope 30/60cm	Elastic cords 30/60cm		Balance
								Red	Black	
200 kg (100 kg per bracket/rope)	200 kg (100 kg per bracket/rope)	150 kg	150 kg	100 kg	100 kg	100 kg	150 kg	20 kg	10 kg	150 kg
The specified load limits apply to one single unit (e.g., one sling, one strap, one rope, or one elastic cord).										

Table 3. Max load for Redcord

- Avoid shock loads (e.g., bouncing), which may permanently damage your slings.
- Avoid using slings/straps as a swing. Repetitive swing movements will involve much more wear and tear than normal use and may reduce strength permanently.
- Never place the ropes around your neck, since this may cause strangulation, injury, or harm.

Storage and handling cautions

- Store the system indoors in a dry, cool place, away from direct sunlight, UV radiation, or chemicals.
- Avoid exposure to strong temperature variations and mechanical impact.
- Keep away from acids and other chemical agents that can damage fibers or coatings.
- Transport the system only in its original packaging to prevent deformation or scratching of metal parts.
- Improper storage can shorten product lifetime and compromise safety.

Cautions:

- Redcord elastic cords contain natural rubber latex, which may cause an allergic reaction in individuals sensitive to latex.
- Do not use incompatible accessories.

- Do not use lubricants (oil, grease, silicone) on aluminum sections or traverses.
- Inspect straps, slings, and other components regularly and never use the product that shows any visible damage (see Table 4)

	Lifetime	Wear signs
Redcord Rope 30/60 cm 5 m	4 years	If inspection reveals damage to the core. If it has been in contact with any active or dangerous chemicals. If the hook does not lock properly. If loose thread or the white kernel is visible on the rope. If the shape of the rope kernel is oval instead of round. If the cleat (i.e., rope lock) is damaged or worn out. If the cleat is sliding on the rope.
Redcord Slings, Strap	4 years	If the slings are bleached. If the webbing is flossy, crispy, or frayed. If the metal ring is split or divided. If the webbing shows signs of abrasion, cutting, or chemical dan If the stitching is frayed or broken. If it has been exposed to active or aggressive chemicals. If there are doubts about their safety.
Redcord Elastic Cords	2 years	If inspection reveals damage to the core. If it has been in contact with any active or dangerous chemicals. If there is the slightest doubt about its security. If the maximum load limit is exceeded. If expanded to maximum length. If the hook is damaged. If the cleat (rope lock) is sliding on the rope. If the cleat is damaged or worn out.

Table 4. Lifetime and wear signs

Any **serious incident** that has occurred in relation to the device should be reported to the manufacturer and to the competent authority of the Member State in which the user or patient is located, in accordance with applicable national requirements.

3.2. Storage and transport

- Store indoors in a dry, cool place away from potential sources of contamination, mechanical impacts, and strong temperature variations. Avoid exposure to UV radiation and direct sunlight.
- Keep away from chemical agents, especially acids, which can cause invisible fiber degradation.
- The device should be transported in its original packaging. It is important to ensure that all metal components of the SSS III are securely protected during transport to avoid scratches, dents, or deformation.
- **Disposal:** Redcord products do not contain hazardous substances. Components made of plastic, metal, and textile can be disposed of or recycled in accordance with local regulations.

⚠ **CAUTION**: Improper storage of Redcord products can shorten their lifetime and reduce safety.

3.3. Cleaning and disinfection – reprocessing information

Not intended to be sterilized.

Before use and between users: inspect the external surfaces for damage or wear. Clean the contact surfaces. If required by local hygiene procedures, disinfect them with a non-corrosive, hospital-grade disinfectant compatible with painted/anodized metal and plastics. Wipe off residues and let the product dry completely.

Cleaning the Redcord Sliding Suspension System III (SSS III)

- Clean with a soft cloth moistened with water or a mild cleaning agent (e.g., soft soap).

Cleaning the Redcord Trainer/Axis

- Clean with a soft cloth moistened with water or a

Cleaning the Redcord Accessories (slings, ropes, elastics)

- Clean with a soft brush and hand-hot soapy water or with a

- Disinfectants are permitted.
- Do not use abrasive cloths, scrubbing powders, or solvents such as spirit or petrol.
- Use a vacuum cleaner or dry cloth to remove dust, including the inner side of the traverses.
- Do NOT use lubricants (e.g., oil, grease, silicone) on aluminum sections or traverses; they can reduce or disable the brake function, attract dust and increase friction, and lead to poor system operation.
- **Tip:** Washing the aluminum rails will often improve braking. Dust may accumulate and reduce the effect between the brake block and the rails.

mild cleaning agent (e.g., soft soap).
- Disinfectants are permitted.
- **Do not use** abrasive cloths, scrubbing powders, or solvents such as spirit or petrol.

solution of household detergent (e.g. washing-up liquid).
- **Drying:** Air dry only. Avoid direct sunlight, drying cabinets, or heat sources (e.g., radiators).

Important Precautions:
Do NOT use fabric softeners/rinsing agents.
Do NOT use benzine and other stain removers to clean.
Do NOT disinfect with hot steam.
Do NOT dry in sunlight or by using a drying cabinet.
Do NOT use chlorine-based bleach (sodium hypochlorite).
Avoid contact with chemical agents, especially acids, which may invisibly damage the fibers.
End of use (withdrawal): Do not reuse if there is any damage or excessive wear. See Table 4

4. Accessories and Replacement Parts

Extra accessories (optional, can be ordered separately)

Redcord Trainer	REF 110010
Redcord Wide Sling	REF 111001
Redcord Narrow Sling	REF 111002
Redcord Split Sling	REF 111003
Redcord Elastic cord 30 cm, red, high resistance, one pair,	REF 113001
Redcord Elastic cord 30 cm, black, low resistance, one pair,	REF 113002
Redcord Elastic cord 60 cm, red, high resistance, one pair,	REF 113100
Redcord Elastic cord 60 cm, black, low resistance, one pair,	REF 113101
Redcord Hook Rail	REF 140060
Redcord Mat	REF 130120

Replacement parts (maintenance)

Redcord Traverse extra,	REF 120201
Redcord Trainer,	REF 110010
Redcord Axis,	REF 110050-1
Redcord Strap, one pair	REF 111200
Redcord Wide Sling,	REF 111001
Redcord Narrow Sling,	REF 111002
Redcord Split Sling,	REF 111003
Redcord Rope, red, 30 cm, one pair,	REF 112001
Redcord Rope, red, 60 cm, one pair,	REF 112020
Redcord Elastic cord 30 cm, red, high resistance, one pair,	REF 113001
Redcord Elastic cord 30 cm, black, low resistance, one pair,	REF 113002
Redcord Elastic cord 60 cm, red, high resistance, one pair,	REF 113100
Redcord Elastic cord 60 cm, black, low resistance, one pair,	REF 113101
Redcord Brake Rope,	REF 112201
Redcord Roll	REF 130210
Redcord Rope Set for Upgrading	REF 140001
Redcord Rope, red, 5 m	REF 112100

5. Various configurations/variants available on the market

Redcord Workstation Professional is available in the following configurations:

- Ceiling mounted: Redcord Workstation Professional, REF 100023-5
- Wall mounted: Redcord Workstation Professional, Wall Stand, REF 100123-5
- Floor mounted: Redcord Workstation Professional, Floor Stand, REF 100223-5

6. Warranty Terms

Warranty

2 years. The warranty covers any faults in materials or manufacture. The warranty period runs without interruption for a period of 24 months from the delivery date of the products from Redcord AS. Exclusions from the guarantee: normal wear and tear, modifications or alterations, incorrect storage, poor maintenance, negligence, improper or incorrect usage. The warranty is valid only if there are deficiencies in the product, i.e., it is clearly wrong according to the technical specification and how the product is intended to be. Incorrect use and normal wear and tear are not eligible for claim. Redcord 's obligations pursuant to this warranty are limited to repair or replacement.

7. Explanation of symbols and abbreviations

	Symbol Glossary
CE	This medical device complies with the general safety and performance requirements of Regulation (EU) 2017/745 for medical devices.
MD	Medical Device
UDI	Unique device identifier (UDI) The product label includes a UDI for traceability.
	Manufacturer
LOT	Batch code
REF	Catalogue number (REF)
	Caution
	Keep dry
	Keep away from sunlight
LATEX	Contains natural rubber latex
	Consult Instructions for Use

Contact and technical support
Redcord AS,
Teknologiveien 11, NO-4846 Arendal, Norway
redcord@redcord.com +47 37 03 00 00
Local Distributors: www.redcord.com