Redcord Ceiling Suspension, 26-87 cm, heights 266-327 cm

REF 120540

Instructions for use / EN



Redcord AS
Teknologiveien 11
NO- 4846 Arendal, Norway

CE

Intended use: The Redcord Ceiling Suspension, 26–87 cm, heights 266–327 cm is an accessory intended to be used with Redcord Trainer (REF 110010) and compatible Redcord systems containing Redcord Trainer. It is used to lower the Redcord Trainer to the desired height above the floor when the ceiling height is between 266 cm and 327 cm. The suspension allows the Redcord Trainer to be lowered by 26 cm to 87 cm when installed according to the Instructions for Use.

** If your ceiling height is between 328-427cm and you would like to lower your Redcord Trainer more, you will need to use 120541 Redcord Add. Length for 120540, Trainer, 88-187cm. Your Trainer can be lowered up to 187cm.*

Ceiling type	This product is intended for installation on concrete or wooden ceilings only. It should not be installed on porous ceilings.
Safety Information	▪ The maximum load limit for Redcord Trainer is **200 kg (100 kg per bracket).** ▪ Stop using it if you notice any looseness, corrosion, cracks, deformation or damage of screws/anchors. ▪ **Do not install** into drywall/gypsum boards, ceiling tiles, cladding or hollow/weak concrete. ▪ **Do not install** to ceilings made of porous or lightweight aerated concrete (e.g., YTONG, SIPOREX, LECA). ▪ **Do not install** into ceiling panels, wall plates or plasterboard only; it must be fixed into solid concrete or into structural wooden joists. ▪ We recommend that the installation be performed by qualified personnel or under the supervision of the person responsible for technical installation.
Maintenance	Screws and fastened devices may become loose as time goes by due to vibration and movement, etc. You should always regularly check that the ceiling suspension is fastened properly to ensure it is safe to use together with your Redcord Trainer. We recommend you tighten all screws and fastening devices at least once within one month of the initial assembly and installation, and then every 6 months thereafter.
Storage	Store dry, indoors; avoid corrosive environments.
Transport	During transport, ensure that all metal components are properly protected to prevent damage.
Disposal	Dispose of the product as metal waste in accordance with local regulations.

⚠ **CAUTION:** Check the ceiling condition before installation. Only CONCRETE or WOODEN ceiling recommended. No porous ceilings.

Seek professional advice about the condition of the ceiling prior to the installation of the device. Redcord takes no responsibility for the suitability or condition of the ceiling on which the equipment is installed. Redcord takes no responsibility for third-party suspension legs, attachments, or components. Redcord takes no responsibility for any personal or physical damages that might arise due to incorrect installation, and/or due to the ceiling, and/or incorrect use of Redcord equipment.

Make sure you are facing the correct side of the Trainer before use.
The front and back of the device are clearly marked.

Redcord Ceiling suspension, 26-87 cm, heights 266-327 cm, includes:

①Ceiling rails, 2 pcs	②Angle joint plate, 4 pcs	③Leg 470 mm, 2 pcs
		
④Joint, 2 pcs	⑤Leg 245 mm, 2 pcs	⑥Attachment hook, 2 pcs
		
⑦Crossbar, 1 pc 	Screw bag for assembly: - Screw M8 (32 pcs) - Nut (32 pcs) - Washer M8 (20 pcs) 	Screw bag for installation: - Expansion bolts (4 pcs)  - Wood screw 90 mm (8 pcs) 

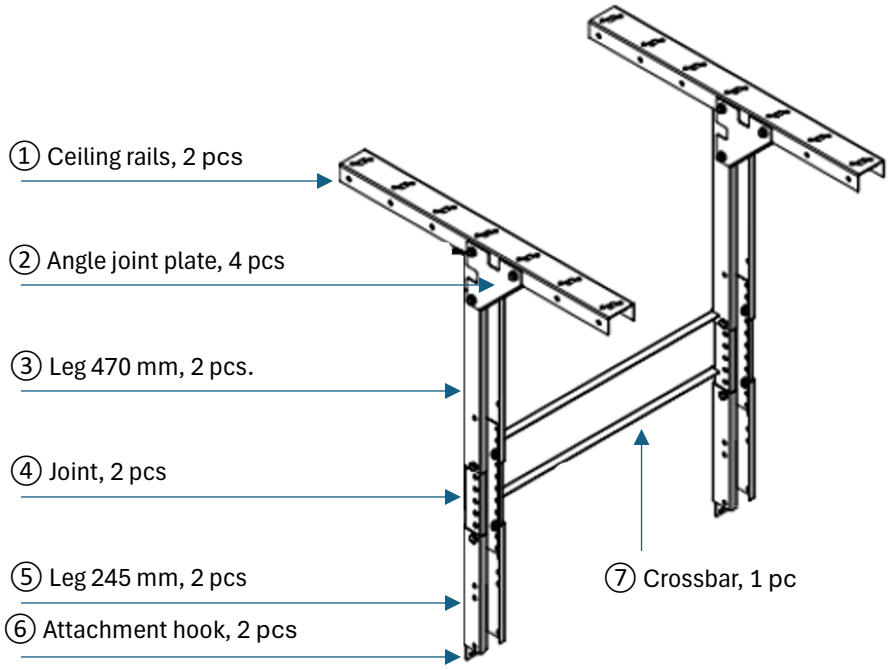

ASSEMBLING AND INSTALLATION

Necessary equipment for assembling and installation (**not included in the package**):

- Hammer drill, with 8 mm concrete/masonry drill bit (for concrete ceiling).
- 13 mm open-ended spanner and socket wrench.
- Hex key for M8 screw.
- Torx bit T40 for wood screws.
- Pencil or awl to make marks on the ceiling.
- Carpet knife (for lowered ceiling).

Suitable place for assembling and installation

- Check to ensure that there is enough room on the ceiling for assembling and installation.
- The legs can be attached to the ceiling rails at different level/length, but you need an opening of approx. 13 cm so that you can screw the legs tightly to the ceiling rails.
- If you have a lowered ceiling, please take down the lowered ceiling and ensure above the lowered ceiling is made of concrete or wood and is not porous material with insufficient load capacity.

1. Install ceiling rails

This Redcord ceiling suspension system for Trainer includes screw holes that allow for mounting to concrete or wooden ceilings. You should use **at least 2 screws** to install each ceiling rail to the ceiling.

Install on concrete ceiling

When mounting the ceiling rails to concrete ceiling, you should use the oval holes on the ceiling rails.

1. Hold one ceiling rail up against the ceiling in the desired place and make marks for 2 oval screw holes. Note that the distance between the selected 2 holes should be as far as possible.
2. Use an 8 mm masonry drill and drill to a depth of 45 mm at the 2 marked places. Insert the expansion bolts and put the ceiling rail on the bolt. Attach the washer and nut and tighten them well.
3. Mark the place to install another ceiling rail. The distance between the two ceiling rails (center to center) should be 60 cm (see picture 1 to the right).
4. Repeat step 1-2 to install the second ceiling rail.

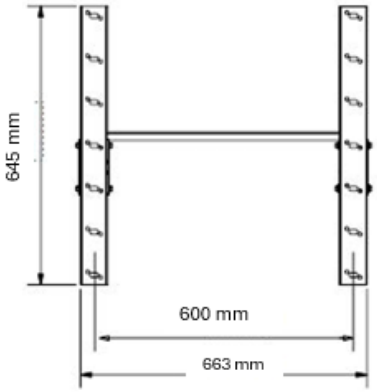

Picture 1

Install on wooden ceiling

When mounting the ceiling rails to wooden ceiling, you should use the round holes on the ceiling rails.

1. Ensure you install the rails to ceiling beams and not just to panels.
2. Hold one ceiling rail up against the ceiling in the desired place, and make marks for 2 small, round screw holes. Note that the distance between the selected 2 holes should be as far as possible.
3. Insert the 90 mm wood screws in the marked holes and screw the rail to the ceiling tightly. (The screws are self-drilling screws and can be screwed in without prior drilling. It is easier to insert the screws if you apply oil, wax, or soap to them).

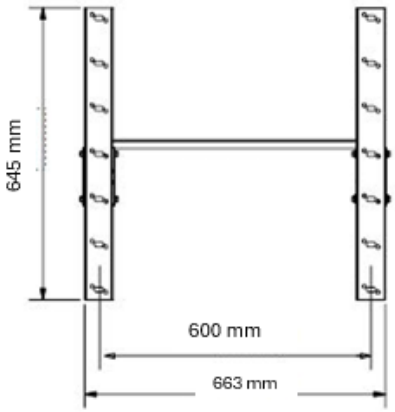

Picture 2

4. Mark the place to install another ceiling rail. The distance between the two ceiling rails (center to center) should be 60 cm (see picture 2 to the right).
5. Repeat steps 2-3 to install the second ceiling rail.

2. Assemble Legs

Please keep the following rules in mind while assembling legs.

- The longest legs/pieces should be uppermost.
- The joint and the connected piece should overlap as much as possible.
- A joint has 2 connection sides, and each connection side can connect to one piece (leg/ attachment hooks/*extension legs). To tighten and secure the joint and connected piece, you need to use at least 3 screws on each connection side of the joint. One screw should be used on the hole closest to the edge of the joint, and one screw on each side of the joint on connecting points. See picture 3 to the right.
- Joints should never be installed directly on the ceiling rails.
- The crossbar should be attached as far down from the ceiling rails as possible.

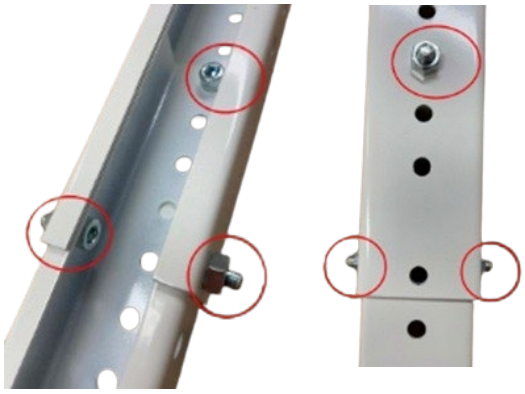

**Extension legs are included in Redcord add. length for 120540, Trainer, 88-187 cm(REF 120541).*

Picture 3

Following the steps described below to assemble legs:

- Find the desired height where you want to hang your Redcord Trainer. The distance from the ceiling rails to the height where you will hang your Redcord Trainer is the total length of your jointed legs/pieces.
- Join the leg pieces using M8 screws following the rules described above.
- Assemble one attachment hook to the bottom of each leg/joint piece using at least 2 pcs M8 screws. Do NOT fasten the screws completely.
- Attach the legs to the ceiling rails using one angle joint plate on each side of each leg. You need to use 3 pcs M8 screws in each angle joint plate, but do NOT fasten the screws completely.
- Assemble the crossbar between the legs. You need to use at least 2 pcs M8 screws on each side of the crossbar. If there is already a screw that is used to connect the joint and leg/attachment hook in the assembling area of the crossbar, you can use it as one of the screws to connect the crossbar. Do NOT fasten the screws completely.
- Hang up your Redcord Trainer to the attachment hooks. Check:
  - **If Trainer is horizontally aligned with the floor.**
  - **If Trainer is hung at the desired height**

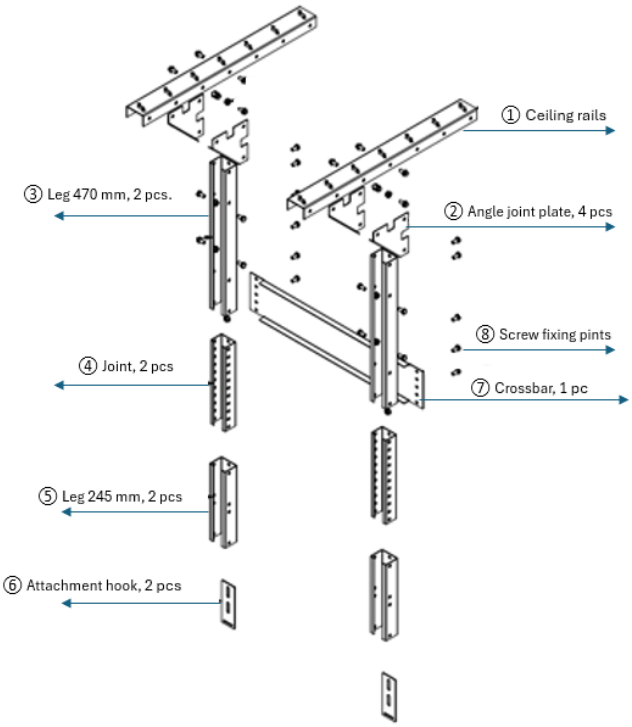

Picture 4

- If so, then fasten all screws properly from top (ceiling rails) to bottom. Before fastening the screws for attachment hooks, do another final check.

3. Fastening Test – Inspect screw fastening and suspension stability

After all the screws are properly fastened, grip the unit with your hands and shake it in various directions. Do this on both sides. There should be no movements or collision sounds. Finally, inspect the screws for any displacement before hanging the Redcord Trainer back.

You are now ready to perform the Safety Test.



SAFETY TEST

After installing the ceiling suspension and before you start exercising with Redcord Trainer, you must test the installation and the load capacity.

- Attach the device to the suspension.
- Grab the suspension points and try to move them vertically and horizontally. The suspension should be stable in all directions. Tighten the screws if necessary.
- Lower the strap/sling to about 15 cm above the floor.
- Place one foot in a strap and carefully bounce up and down using your body weight.

The ceiling suspensions should be inspected regularly.
Frequent use: If the device is used regularly or frequently, we recommend that a safety test be conducted at least once a week.
Infrequent use: if the device is used after a prolonged period of inactivity, it is important to perform a safety test before each use to ensure the device is in proper working condition.

Any **serious incident** that has occurred in relation to the device should be **reported to the manufacturer** and to the competent **authority of the Member State** in which the user or patient is located, in accordance with applicable national requirements. For contact details, see the end of this instruction for use.

Explanation of symbols and abbreviations

	Symbol Glossary
CE	Conformity with applicable EU legislation
UDI	Unique device identifier (UDI) The product label includes a UDI for traceability.
REF	Catalogue number (REF)
	Manufacturer
LOT	Batch code
	Caution
	Keep dry
	Keep away from sunlight
	Consult Instructions for use

Contact and technical support
Redcord AS,
Teknologiveien 11, NO-4846 Arendal, Norway
redcord@redcord.com +47 37 03 00 00
Local Distributors: www.redcord.com